IMI TA

CV 216/316, 225/325, 240/340 S/E

Standard control valves

Control valves

Engineering GREAT Solutions

IMI Hydronic Engineering

CV 216/316, 225/325, 240/340 S/E

Suitable in building and process engineering for various mediums. Suitable with stuffing box extension or stem seal with stainless steel bellow and for valves made of stainless steel from -30°C up to 350°C.

Key features

- **Microprocessor controlled**
  Multifunctional adjustable.
- **Different body materials – Various pressure classes**
  Available in cast iron, spheroidal graphite, cast steel and stainless steel – from PN 16 up to PN 40.
- **3-way multifunctional**
  Suitable as mixing valve or diverting valve.

Technical description

Application:
Chilled and hot-water with max. 50% antifreeze and anti-corrosive compounds: glycol, ethyl alcohol glycol, mono ethyl alcohol, ethyl, methyl alcohol, glycerine, antifrogen® N+L, media based on mineral oil, steam, oil, acids and lye.

Function:
CV216/225/240S/240E: 2-way control valve
CV316/325/340S/340E: 3-way mixing or diverting valve with reduced closing pressure

Characteristics:
CV 216/225/240S/240E:
DN 15-50: equal % (option: linear)
DN 65-300: equal % mod. (option: linear)
Perforated plug: equal % (option: linear)
CV 316/325/340S/340E:
DN 15-40: A–AB equal % (option: linear), B–AB linear
DN 50-300: A–AB equal % mod. (option: linear), B–AB linear

Dimensions:
CV216: DN 125-300
CV316: DN 15-300
CV225/325: DN 15-200
CV240/340S, CV240/340E: DN 15-300

Pressure class:
CV216/316: PN 16
CV225/325: PN 16/25/40
CV225/325 (DN 150): PN 16/25
CV225/325 (DN 200): PN 16
CV240S/340S: PN 16/25/40
CV240E/340E: PN 16/25/40

Temperature:
Max. working temperature: 180°C
Min. working temperature: 0°C
For lower and higher temperatures (-30°C – 350°C) please contact IMI Hydronic Engineering.

Material:
Body:
CV216/316[1]: Cast iron EN-JL1040
CV225/325: Spheroidal graphite EN-JS1024
CV240S/340S: Cast steel 1.0619+N
CV240E/340E: Stainless steel 1.4408
Plug: CrNi-steel 1.4057. CV240E/340E: CrNi-steel 1.4571.
Stem: CrMo-steel 1.4122. CV240E/340E: CrNi-steel 1.4571.
Stem sealing:
EPDM O-rings: 0 - 180°C (chilled and hot-water with max. 50% antifreeze and anti-corrosive compounds: glycol, ethyl alcohol glycol, mono ethyl alcohol, ethanol, methyl alcohol, glycerine, antifrogen® N+L).
FKM O-rings: 0 - 200°C (media based on mineral oil).
Fluoraz® O-rings: 0 - 200°C (hot water, steam, oil, acids and lye).
Graphite-packing[2]: 0 - 350°C (hot water, steam, oil, acids and lye).

Marking:
TA, PN, DN and flow direction arrow.
(in case of 3-way valves names of ports also - A, B, AB)

Connection type:
CV216/225/316/325: Flanges according to EN 1092-2 type 21.
CV240S/240E/340S/340E: Flanges according to EN 1092-1 type 21.

Face to face:
According to EN 558-1 basic series 1.

Leakage rate:
EN 1349 - seat-leakage IV L1 (≤ 0.01% of Kvs-value).

Max. lift of the control valve:
DN 15-40: 20 mm
DN 50-65: 30 mm
DN 80-100: 50 mm
DN 125-200: 60 mm
DN 250-300: 80 mm

Range ability:
≥50:1

Actuators:
MC103, MC163, MC253, MC403, MC503, MC1003 or MC1503.

1) Due to a change in material, we reserve the right to supply valves in higher grade spheroidal graphite EN-JS1024.
2) Only in combination with stuffing box extension or stem seal with stainless steel bellow.

Valve variants and accessories

For two-way and three-way valves:
- Housing connecting flanges;
  - with groove according to EN 1092-1 type D,
  - with socket according to EN 1092-1 type F,
  - with spigot according to EN 1092-1 type E.
- Body and plug seat grounded in; EN 1349 - seat-leakage IV-S1 L1 (≤ 0.0005% of Kvs-value).
- Plug with soft sealing made of NBR , EPDM, PTFE; EN 1349 – seat-leakage VI G1 (tight sealing).
- Stem heater: Temperature down to -30°C, 24 VAC, 50 Hz or 24 VDC, Pmax. ≈ 200 VA, PN ≈ 60 VA, S1 100% ED, IP 54.
- Transformer for stem heater: 230/24 VAC, 50 Hz.
- Stem seal with stainless steel bellow;
  - for valves made of cast iron -10°C - 200°C.
  - for valves made of spheroidal graphite and cast steel -10°C - 350°C (stuffing box made of graphite).
  - for valves made of stainless steel -30°C - 350°C (stuffing box made of graphite).
- Stuffing box extension: 100 mm
  - for valves made of spheroidal graphite and cast steel -10°C - 350°C.
  - for valves made of stainless steel -30°C - 350°C.
- Epoxy resin special varnish as a corrosion resistant in case of condensed water, max. 80°C [3].
- Technical silicon free version, max. 180°C.
- Oil and fat free for oxygen application.

For two-way valves:
- Screwed seat;
  - for valves made of cast iron, spheroidal graphite and cast steel made of 1.4122 (unhardened or hardened).
  - for valves made of stainless steel (made of 1.4571).
- Perforated plug;
  - for valves made of cast iron, spheroidal graphite and cast steel made of 1.4057 (unhardened or hardened).
  - for valves made of stainless steel (made of 1.4571).
- Housing seat SKWAM plated or Stellit 6 plated [4].
- Balanced plug, max. operating temperature 200°C.

3) Except valves made of stainless steel.
4) Only for valves made of cast steel and stainless steel.

Installation

Valve trim could be damaged by dirt in the pipe system. Installation of strainers are recommended.

Note! The free space above the actuator is necessary.

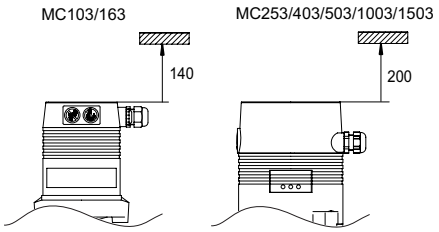

Technical data – Valve CV216 and CV316 with actuator

CV 216
PN 16

DN			125	150	200	250	300
Kvs value		m³/h	250 200^{S} 160 125$^{S/L}$	400 315^{S} 250 200$^{S/L}$	630 500^{S} 400 315$^{S/L}$	1000 800 630 500^{L} 400^{L}	1250 1000 800 630^{L}
Stroke		mm	60			80	
MC403/24 MC403/230	t [1)]	s	40				
			25*				
	Δp_s	kPa	200	130			
MC503/24 MC503/230	t [1)]	s	300				
			150*				
	Δp_s	kPa	290	190			
MC1003/24 MC1003/230	t	s	60			80	
			500	350	200	100	
MC1503/24 MC1503/230	t	s	120			160	
	Δp_s	kPa	950	700	370	220	150

CV 316
PN 16

DN			15	20	25	32	40	50	65	80	100	125	150	200	250	300
Kvs value		m³/h	4 2,5	6,3 5 4^{S} 2,5^{S}	10 8 6,3^{S} 5^{S}	16 12,5 10^{S} 8^{S}	25 20 16^{S} 12,5^{S}	40 31,5 25^{S} 20^{S}	63 50 40^{S} 31,5^{S}	100 80 63^{S} 50^{S}	160 125 100^{S} 80^{S}	250 200 160^{S} 125^{S}	400 315 250^{S} 200^{S}	630 500 400^{S} 315^{S}	1000 800 630 500 400	1250 1000 800 630
Stroke		mm	20					30		50		60			80	
MC103/24 MC103/230	t [1)]	s	240													
			180													
			80*													
			40													
	Δp_s	kPa	1250	1250	1050	600	350									
MC163/24 MC163/230	t [1)]	s	120					180								
			80*					120*								
	Δp_s	kPa	1600	1600	1600	1250	750	450	300							
MC253/24 MC253/230	t [1)]	s	100					150		250						
			50*					75*		125*						
	Δp_s	kPa	1600	1600	1600	1600	1400	850	540	350	200					
MC403/24 MC403/230	t [1)]	s	15					20		30		40				
			10*					15*		20*		25*				
	Δp_s	kPa	1600	1600	1600	1600	1600	1500	950	650	400	200	130			
MC503/24 MC503/230	t [1)]	s	100					150		250		300				
			50*					75*		125*		150*				
	Δp_s	kPa	1600	1600	1600	1600	1600	1600	1250	850	500	290	190			
MC1003/24 MC1003/230	t	s							30	50		60			80	
	Δp_s	kPa							1600	1500	950	500	350	200	100	
MC1503/24 MC1503/230	t	s										120			160	
	Δp_s	kPa										950	700	370	220	150

100 kPa = 1 bar = 10 mWS
Δp_S = Closing pressure

1) Actuating time freely adjustable, presetting is marked with *

L) Available with perforated plug
S) Special Kvs value

Technical data – Valve CV225 and CV325 with actuator

CV225

PN 16, PN 25, PN 40

DN			15	15	20	25	32	40	50	65 2)	80	100 2)	125 2)	150 3)	200 4)
Kvs value		m³/h	4^{L}	2,5 1,6 1,25 1,0 0,63 0,4 0,25 0,16	6,3^{L} 5$^{S/L}$ 4^{L} 2,5$^{S/L}$	10 8$^{S/L}$ 6,3^{L} 5$^{S/L}$	16 12,5^{S} 10^{L} 8$^{S/L}$	25 20^{S} 16^{L} 12,5$^{S/L}$	40 31,5^{S} 25^{L} 20$^{S/L}$	63 50^{S} 40^{L} 31,5$^{S/L}$	100 80^{S} 63^{L} 50$^{S/L}$	160 125^{S} 100^{L} 80$^{S/L}$	250 200^{S} 160 125$^{S/L}$	400 315^{S} 250 200$^{S/L}$	630 500^{S} 400 315$^{S/L}$
Stroke		mm	20						30		50		60		
MC103/24 MC103/230	t 1)	s	240												
			180												
			80*												
			40												
	Δp_s	kPa	1250	3500	1250	1050	600	350							
MC163/24 MC163/230	t 1)	s	120						180						
			80*						120*						
	Δp_s	kPa	2400	4000	2400	2050	1250	750	450	300					
MC253/24 MC253/230	t 1)	s	100						150		250				
			50*						75*		125*				
	Δp_s	kPa	4000	4000	4000	3500	2200	1400	850	540	350	200			
MC403/24 MC403/230	t 1)	s	15						20		30		40		
			10*						15*		20*		25*		
	Δp_s	kPa	4000	4000	4000	4000	3700	2400	1500	950	650	400	200	130	
MC503/24 MC503/230	t 1)	s	100						150		250		300		
			50*						75*		125*		150*		
	Δp_s	kPa	4000	4000	4000	4000	4000	3150	1950	1250	850	500	290	190	
MC1003/24 MC1003/230	t	s								30	50		60		
	Δp_s	kPa								2150	1500	950	500	350	200
MC1503/24 MC1503/230	t	s											120		
	Δp_s	kPa											950	700	370

CV325

PN 16, PN 25, PN 40

DN			15	20	25	32	40	50	65 2)	80	100 2)	125 2)	150 3)	200 4)
Kvs values		m³/h	4 2,5	6,3 5 4^{S} 2,5^{S}	10 8 6,3^{S} 5^{S}	16 12,5 10^{S} 8^{S}	25 20 16^{S} 12,5^{S}	40 31,5 25^{S} 20^{S}	63 50 40^{S} 31,5^{S}	100 80 63^{S} 50^{S}	160 125 100^{S} 80^{S}	250 200 160^{S} 125^{S}	400 315 250^{S} 200^{S}	630 500 400^{S} 315^{S}
Stroke		mm	20					30		50		60		
MC103/24 MC103/230	t 1)	s	240											
			180											
			80*											
			40											
	Δp_s	kPa	1250	1250	1050	600	350							
MC163/24 MC163/230	t 1)	s	120					180						
			80*					120*						
	Δp_s	kPa	2400	2400	2050	1250	750	450	300					
MC253/24 MC253/230	t 1)	s	100					150		250				
			50*					75*		125*				
	Δp_s	kPa	4000	4000	3500	2200	1400	850	540	350	200			
MC403/24 MC403/230	t 1)	s	15					20		30		40		
			10*					15*		20*		25*		
	Δp_s	kPa	4000	4000	4000	3700	2400	1500	950	650	400	200	130	
MC503/24 MC503/230	t 1)	s	100					150		250		300		
			50*					75*		125*		150*		
	Δp_s	kPa	4000	4000	4000	4000	3150	1950	1250	850	500	290	190	
MC1003/24 MC1003/230	t	s							30	50		60		
	Δp_s	kPa							2150	1500	950	500	350	200
MC1503/24 MC1503/230	t	s										120		
	Δp_s	kPa										950	700	370

100 kPa = 1 bar = 10 mWS
Δp_S = Closing pressure. The closing pressure is limited by the nominal pressure.

1) Actuating time freely adjustable, presetting is marked with *
2) PN 16 or PN 25-40
3) PN 16 or PN 25
4) PN 16

L) Available with perforated plug
S) Special Kvs value

Technical data – Valve CV240S/E, CV340S/E with actuator

CV240S, CV240E
PN 40

DN			15	15	20	25	32	40	50	65	80	100	125	150	200	250	300
Kvs value		m³/h	4^{L}	2,5 1,6 1,25 1,0 0,63 0,4 0,25 0,16	6,3^{L} 5$^{S/L}$ 4^{L} 2,5$^{S/L}$	10 8$^{S/L}$ 6,3^{L} 5$^{S/L}$	16 12,5^{S} 10^{L} 8$^{S/L}$	25 20^{S} 16^{L} 12,5$^{S/L}$	40 31,5^{S} 25^{L} 20$^{S/L}$	63 50^{S} 40^{L} 31,5$^{S/L}$	100 80^{S} 63^{L} 50$^{S/L}$	160 125^{S} 100^{L} 80$^{S/L}$	250 200^{S} 160 125$^{S/L}$	400 315^{S} 250 200$^{S/L}$	630 500^{S} 400 315$^{S/L}$	1000 800 630^{L} 500^{L} 400	1250 1000^{L} 800 630^{L}
Stroke		mm	20						30		50		60			80	
MC103/24 MC103/230	t [1]	s	240														
			180														
			80*														
			40														
	Δp_s	kPa	1250	3500	1250	1050	600	350									
MC163/24 MC163/230	t [1]	s	120						180								
			80*						120*								
	Δp_s	kPa	2400	4000	2400	2050	1250	750	450	300							
MC253/24 MC253/230	t [1]	s	100						150		250						
			50*						75*		125*						
	Δp_s	kPa	4000	4000	4000	3500	2200	1400	850	540	350	200					
MC403/24 MC403/230	t [1]	s	15						20		30		40				
			10*						15*		20*		25*				
	Δp_s	kPa	4000	4000	4000	4000	3700	2400	1500	950	650	400	200	130			
MC503/24 MC503/230	t [1]	s	100						150		250		300				
			50*						75*		125*		150*				
	Δp_s	kPa	4000	4000	4000	4000	4000	3150	1950	1250	850	500	290	190			
MC1003/24 MC1003/230	t	s								30	50		60			80	
	Δp_s	kPa								2150	1500	950	500	350	200	100	
MC1503/24 MC1503/230	t	s											120			160	
	Δp_s	kPa											950	700	370	220	150

CV340S, CV340E
PN 40

DN			15	20	25	32	40	50	65	80	100	125	150	200	250	300
Kvs value		m³/h	4 2,5	6,3 5 4^{S} 2,5^{S}	10 8 6,3^{S} 5^{S}	16 12,5 10^{S} 8^{S}	25 20 16^{S} 12,5^{S}	40 31,5 25^{S} 20^{S}	63 50 40^{S} 31,5^{S}	100 80 63^{S} 50^{S}	160 125 100^{S} 80^{S}	250 200 160^{S} 125^{S}	400 315 250^{S} 200^{S}	630 500 400^{S} 315^{S}	1000 800 630 500 400	1250 1000 800 630
Stroke		mm	20					30		50		60			80	
MC103/24 MC103/230	t [1]	s	240													
			180													
			80*													
			40													
	Δp_s	kPa	1250	1250	1050	600	350									
MC163/24 MC163/230	t [1]	s	120					180								
			80*					120*								
	Δp_s	kPa	2400	2400	2050	1250	750	450	300							
MC253/24 MC253/230	t [1]	s	100					150		250						
			50*					75*		125*						
	Δp_s	kPa	4000	4000	3500	2200	1400	850	540	350	200					
MC403/24 MC403/230	t [1]	s	15					20		30		40				
			10*					15*		20*		25*				
	Δp_s	kPa	4000	4000	4000	3700	2400	1500	950	650	400	200	130			
MC503/24 MC503/230	t [1]	s	100					150		250		300				
			50*					75*		125*		150*				
	Δp_s	kPa	4000	4000	4000	4000	3150	1950	1250	850	500	290	190			
MC1003/24 MC1003/230	t	s							30	50		60			80	
	Δp_s	kPa							2150	1500	950	500	350	200	100	
MC1503/24 MC1503/230	t	s										120			160	
	Δp_s	kPa										950	700	370	220	150

100 kPa = 1 bar = 10 mWS
ΔpS = Closing pressure. The closing pressure is limited by the nominal pressure

1) Actuating time freely adjustable, presetting is marked with *
L) Available with perforated plug
S) Special Kvs value

MC103

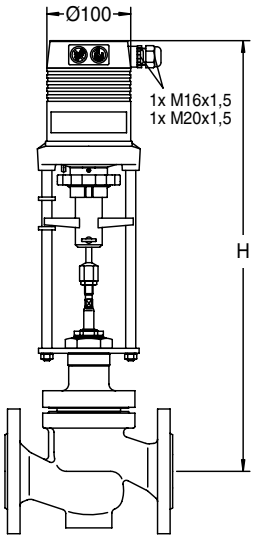

CV2xx/3xx + MC103/24

DN	CV2xx + MC103/24 H	CV3xx + MC103/24 H	MC103/24 Kg
15-20	500	460	2,5
25	500	465	2,5
32-40	515	475	2,5

CV2xx/3xx + MC103/230

DN	CV2xx + MC103/230 H	CV3xx + MC103/230 H	MC103/230 Kg
15-20	525	485	2,5
25	525	490	2,5
32-40	540	500	2,5

Technical description

		MC103/24 [5]	MC103/230 [5]
Actuating time [1]	s/mm	12 · 9 · 4* · 1,9	
Actuating thrust	kN	1,0	
Stroke	mm	max. 20	
Power supply	VAC	24 ±10%	230 +6% -10%
Power supply [2]	VDC	24 ±10%	-
Frequency	Hz	50/60 ±5%	
Power consumption	VA	6	12
Input signal [3]		3-point 0(2)-10 VDC, 77 kΩ 0(4)-20 mA, 0,51 kΩ	
Output signal [3]		0-10 VDC max. 8 mA min. 1200 Ω	
Hysteresis [4]	V	0,15 · 0,5	

1) Actuating time freely adjustable, presetting is marked with *
2) Direct-current - retified alternating voltage
3) Invertible input and output signal
4) Freely adjustable
5) Actuator suitable for medium temperature up to 150 °C

Enclosure class:
IP 54

Resolution:
Electric: 0,04 VDC
Mechanical: 0,095 mm

Ambient temperature:
0 - 60°C

Operation mode:
S3-50% ED c/h 1200 EN 60034-1

End position switch-off:
Load-dependent

Actuator variants:
- Voltage: 115 VAC
- Position switch unit[1)]:
  2 switches (WE1/WE2), potential free, infinitely adjustable
  Rated load: 8 A / 250 VAC, 8 A / 30 VDC.
  Turn-on voltage: max. 400 VAC, max. 125 VDC.
- Enclosure protection: IP 65
- Output signal[1)]: X=0(4)...20 mA
- Adapter with coupling for external products

For variants and accessories please contact IMI Hydronic Engineering.

1) Position switch unit and output signal 0(4)...20 mA not in combination.

Wiring diagram:
B1/B2 Connection of a binary signal (e.g. frost safety)

Standard design **Special accessories**

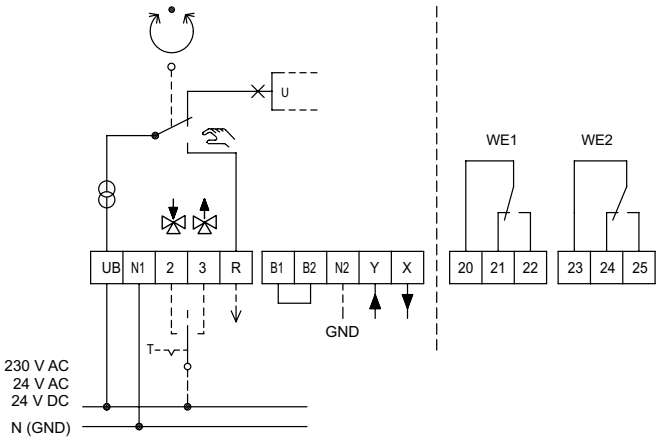

MC163

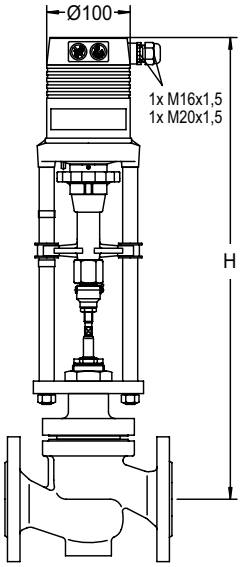

CV2xx/3xx + MC163/24

DN	CV2xx + MC163/24 H	CV3xx + MC163/24 H	MC163/24 Kg
15-20	537	497	4,0
25	537	502	4,0
32-40	552	512	4,0
50	562	522	4,0
65	572	537	4,0

CV2xx/3xx + MC163/230

DN	CV2xx + MC163/230 H	CV3xx + MC163/230 H	MC163/230 Kg
15-20	562	522	4,0
25	562	527	4,0
32-40	577	537	4,0
50	587	547	4,0
65	597	562	4,0

Technical description

		MC163/24	MC163/230
Actuating time [1]	s/mm	6 · 4*	
Actuating thrust	kN	1,6	
Stroke	mm	max. 30	
Power supply	VAC	24 ±10%	230 +6% -10%
Power supply [2]	VDC	24 ±10%	-
Frequency	Hz	50/60 ±5%	
Power consumption	VA	6	12
Input signal [3]		3-point 0(2)-10 VDC, 77 kΩ 0(4)-20 mA, 0,51 kΩ	
Output signal [3]		0-10 VDC max. 8 mA min. 1200 Ω	
Hysteresis [4]	V	0,05 · 0,15 · 0,3 · 0,5	

1) Actuating time freely adjustable, presetting is marked with *
2) Direct-current - retified alternating voltage
3) Invertible input and output signal
4) Freely adjustable

Enclosure class:
IP 54

Resolution:
Electric: 0,04 VDC
Mechanical: 0,05 mm

Ambient temperature:
0 - 60°C

Operation mode:
S3-50% ED c/h 1200, EN 60034-1

End position switch-off:
Load-dependent

Actuator variants:
- Voltage: 115 VAC
- Position switch unit[1]:
  2 switches (WE1/WE2), potential free, infinitely adjustable
  Rated load: 8 A / 250 VAC, 8 A / 30 VDC.
  Turn-on voltage: max. 400 VAC, max. 125 VDC.
- Enclosure protection: IP 65
- Output signal[1]: X=0(4)...20 mA
- Adapter with coupling for external products

For variants and accessories please contact IMI Hydronic Engineering.

1) Position switch unit and output signal 0(4)...20 mA not in combination.

Wiring diagram:
B1/B2 Connection of a binary signal (e.g. frost safety)

Standard design **Special accessories**

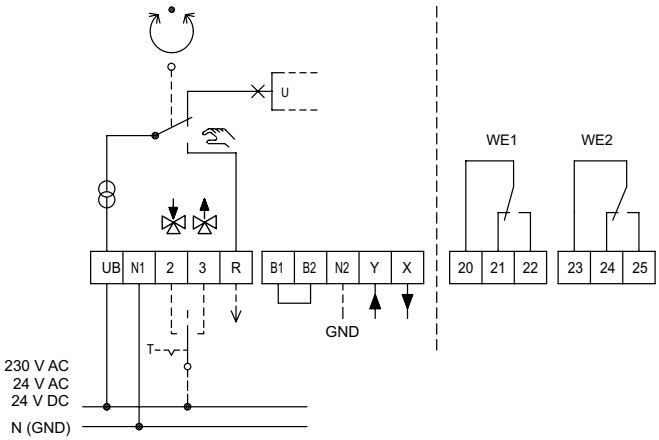

MC253

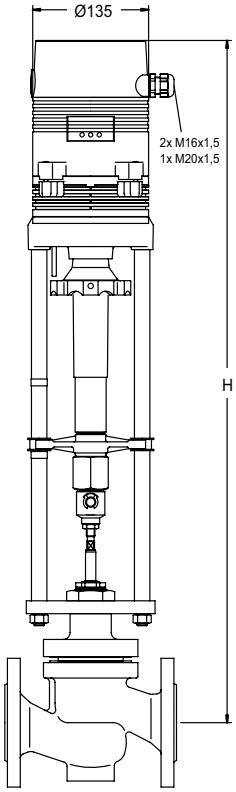

CV2xx/3xx + MC253

DN	CV2xx + MC253 H	CV3xx + MC253 H	MC253/24 Kg	MC253/230 Kg
15-20	795	755	7,4	8,6
25	795	760	7,4	8,6
32-40	810	770	7,4	8,6
50	820	780	7,4	8,6
65	830	795	7,4	8,6
80	845	825	7,4	8,6
100	890	855	7,4	8,6

Technical description

		MC253/24	MC253/230
Actuating time [1]	s/mm	5 · 2,5*	
Actuating thrust	kN	2,5	
Stroke	mm	max. 60	
Power supply	VAC	24 ±10%	230 +6% -10%
Power supply [2]	VDC	24 ±10%	-
Frequency	Hz	50/60 ±5%	
Power consumption	VA	max. 18	max. 25
Input signal [3]		3-point 0(2)-10 VDC, 77 kΩ 0(4)-20 mA, 0,51 kΩ	
Output signal [3]		0-10 VDC max. 8 mA min. 1200 Ω	
Hysteresis [4]	V	0,05 · 0,15 · 0,3 · 0,5	

1) Actuating time freely adjustable, presetting is marked with *
2) Direct-current - retified alternating voltage
3) Invertible input and output signal
4) Freely adjustable

Enclosure class:
IP 54

Resolution:
Electric: 0,04 VDC
Mechanical: 0,04 mm

Ambient temperature:
-10 – 60°C

Operation mode:
S3-50% ED c/h 1200: EN 60034-1

End position switch-off:
Load-dependent

Actuator variants:
- Voltage: 115 VAC
- Position switch unit:
  2 switches (WE1/WE2), potential free, infinitely adjustable
  Rated load: 8 A / 250 VAC, 8 A / 30 VDC.
  Turn-on voltage: max. 400 VAC, max. 125 VDC.
- Enclosure protection: IP 65
- Output signal: X=0(4)...20 mA
- Adapter with coupling for external products

For variants and accessories please contact IMI Hydronic Engineering.

Wiring diagram:
B1/B2 Connection of a binary signal (e.g. frost safety)

Standard design ▸Special accessories

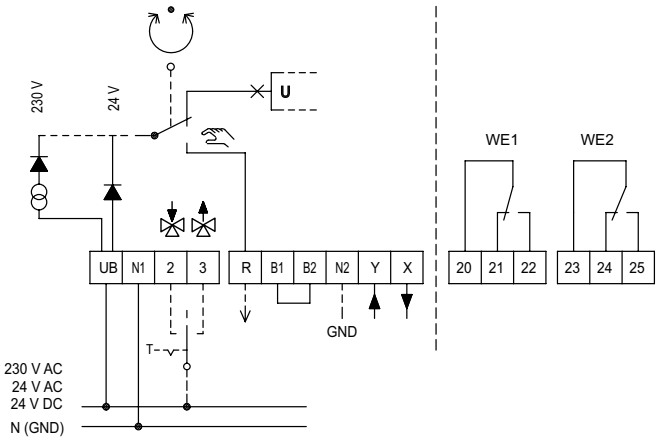

MC403

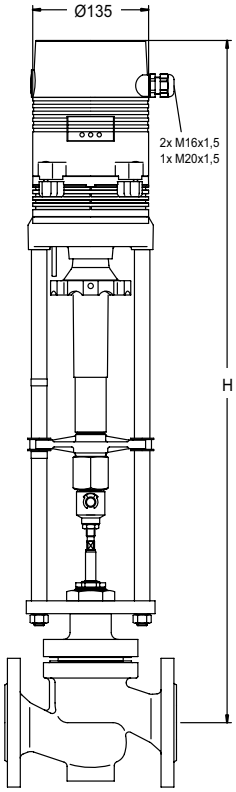

CV2xx/3xx + MC403

DN	CV2xx + MC403 H	CV3xx + MC403 H	MC403/24 Kg	MC403/230 Kg
15-20	840	800	9,2	9,6
25	840	805	9,2	9,6
32-40	855	815	9,2	9,6
50	865	825	9,2	9,6
65	875	840	9,2	9,6
80	890	870	9,2	9,6
100	935	900	9,2	9,6
125	960	905	9,2	9,6
150	985	925	9,2	9,6

Technical description

		MC403/24	MC403/230
Actuating time [1]	s/mm	0,6 · 0,4*	
Actuating thrust	kN	4,0	
Stroke	mm	max. 60	
Power supply	VAC	24 ±10%	230 +6% -10%
Frequency	Hz	50/60 ±5%	
Power consumption	VA	max. 50	max. 63
Input signal [2]		3-point 0(2)-10 VDC, 77 kΩ 0(4)-20 mA, 0,51 kΩ	
Output signal [2]		0-10 VDC max. 8 mA min. 1200 Ω	
Hysteresis [3]	V	0,05 · 0,15 · 0,3 · 0,5	

Actuators with higher actuating thrust upon the request. Please contact IMI Hydronic Engineering.

1) Actuating time freely adjustable, presetting is marked with *
2) Invertible input and output signal
3) Freely adjustable

Enclosure class:
IP 54

Resolution:
Electric: 0,04 VDC
Mechanical: 0,12 mm

Ambient temperature:
-10 – 60°C

Operation mode:
S3-30% c/h 1200: EN60034-1

End position switch-off:
Load-dependent

Actuator variants:
- Voltage: 115 VAC
- Position switch unit:
  2 switches (WE1/WE2), potential free, infinitely adjustable
  Rated load: 8 A / 250 VAC, 8 A / 30 VDC.
  Turn-on voltage: max. 400 VAC, max. 125 VDC.
- Enclosure protection: IP 65
- Output signal: X=0(4)...20 mA
- Adapter with coupling for external products

For variants and accessories please contact IMI Hydronic Engineering.

Wiring diagram:
B1/B2 Connection of a binary signal (e.g. frost safety)

Standard design **Special accessories**

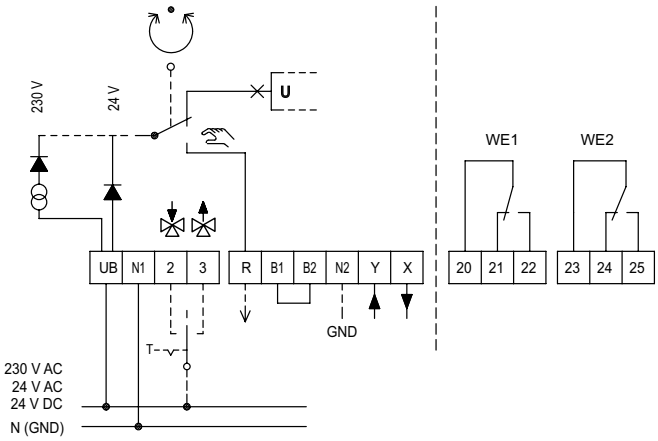

MC503

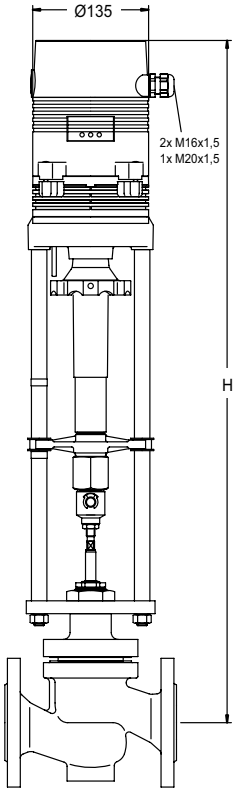

CV2xx/3xx + MC503

DN	CV2xx + MC503 H	CV3xx + MC503 H	MC503/24 Kg	MC503/230 Kg
15-20	795	755	7,4	8,6
25	795	760	7,4	8,6
32-40	810	770	7,4	8,6
50	820	780	7,4	8,6
65	830	795	7,4	8,6
80	845	825	7,4	8,6
100	890	855	7,4	8,6
125	915	860	7,4	8,6
150	940	880	7,4	8,6

Technical description

		MC503/24	MC503/230
Actuating time [1]	s/mm	5 · 2,5*	
Actuating thrust	kN	5,0	
Stroke	mm	max. 60	
Power supply	VAC	24 ±10%	230 +6% -10%
Power supply [2]	VDC	24 ±10%	-
Frequency	Hz	50/60 ±5%	
Power consumption	VA	max. 18	max. 25
Input signal [3]		3-point 0(2)-10 VDC, 77 kΩ	0(4)-20 mA, 0,51 kΩ
Output signal [3]		0-10 VDC max. 8 mA	min. 1200 Ω
Hysteresis [4]	V	0,05 · 0,15 · 0,3 · 0,5	

Actuators with higher actuating thrust upon the request. Please contact IMI Hydronic Engineering.

1) Actuating time freely adjustable, presetting is marked with *
2) Direct-current - retified alternating voltage
3) Invertible input and output signal
4) Freely adjustable

Enclosure class:
IP 54

Resolution:
Electric: 0,04 VDC
Mechanical: 0,04 mm

Ambient temperature:
-10 – 60°C

Operation mode:
S3-50% ED c/h 1200: EN 60034-1

End position switch-off:
Load-dependent

Actuator variants:
- Voltage: 115 VAC
- Position switch unit:
  2 switches (WE1/WE2), potential free, infinitely adjustable
  Rated load: 8 A / 250 VAC, 8 A / 30 VDC.
  Turn-on voltage: max. 400 VAC, max. 125 VDC.
- Enclosure protection: IP 65
- Output signal: X=0(4)...20 mA
- Adapter with coupling for external products

For variants and accessories please contact IMI Hydronic Engineering.

Wiring diagram:
B1/B2 Connection of a binary signal (e.g. frost safety)

Standard design **Special accessories**

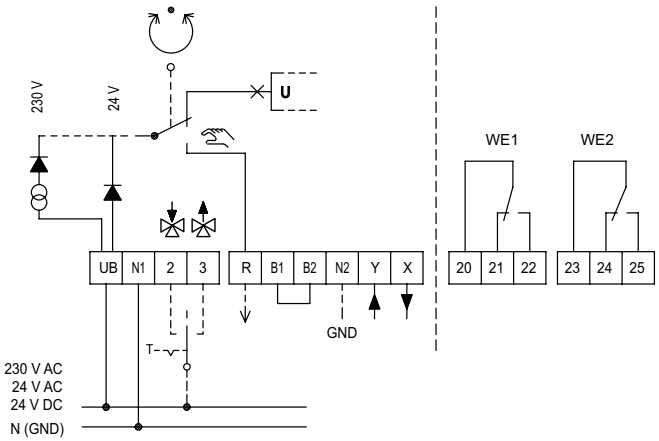

MC1003, MC1503

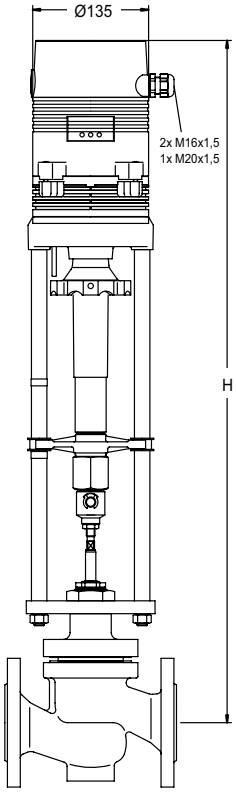

CV2xx/3xx + MC1003

DN	CV2xx + MC1003 H	CV3xx + MC1003 H	MC1003/24 Kg	MC1003/230 Kg
65	930	895	11,0	11,4
80	945	925	11,0	11,4
100	990	955	11,0	11,4
125	1015	960	11,0	11,4
150	1040	980	11,0	11,4
200	1145	1095	11,0	11,4
250	1200	1145	11,0	11,4

CV2xx/3xx + MC1503

DN	CV2xx + MC1503 H	CV3xx + MC1503 H	MC1503/24 Kg	MC1503/230 Kg
125	1015	960	11,0	11,4
150	1040	980	11,0	11,4
200	1145	1095	11,0	11,4
250	1200	1145	11,0	11,4
300	1260	1200	11,0	11,4

Technical description

		MC1003/24	MC1503/24	MC1003/230	MC1503/230
Actuating time	s/mm	1	2	1	2
Actuating thrust	kN	10	15	10	15
Stroke	mm	max. 80			
Power supply	VAC	24 ±10%		230 +6% -10%	
Frequency	Hz	50/60 ±5%			
Power consumption	VA	max. 50		max. 63	
Input signal [2]		3-point 0(2)-10 VDC, 77 kΩ 0(4)-20 mA, 0,51 kΩ			
Output signal [2]		0-10 VDC max. 8 mA min. 1200 Ω			
Hysteresis [3]	V	0,05 · 0,15 · 0,3 · 0,5			

Actuators with higher actuating thrust upon the request. Please contact IMI Hydronic Engineering.

2) Invertible input and output signal
3) Freely adjustable

Enclosure class:
IP 54

Resolution:
Electric: 0,04 VDC
Mechanical: 0,05 mm

Ambient temperature:
MC1003: -10 - 60°C
MC1503: -10 - 50°C

Operation mode:
S3-30% c/h 1200: EN60034-1

End position switch-off:
Load-dependent

Actuator variants:
- Voltage: 115 VAC
- Position switch unit:
  2 switches (WE1/WE2), potential free, infinitely adjustable
  Rated load: 8 A / 250 VAC, 8 A / 30 VDC.
  Turn-on voltage: max. 400 VAC, max. 125 VDC.
- Enclosure protection: IP 65
- Output signal: X=0(4)...20 mA
- Adapter with coupling for external products

For variants and accessories please contact IMI Hydronic Engineering.

Wiring diagram:
B1/B2 Connection of a binary signal (e.g. frost safety)

Standard design **Special accessories**

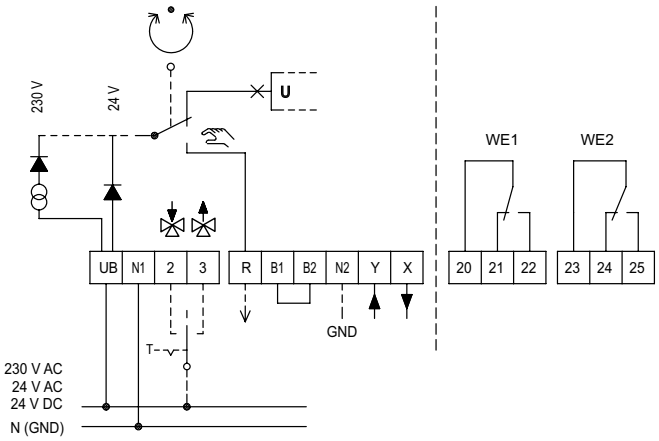

CV216 (2-way)

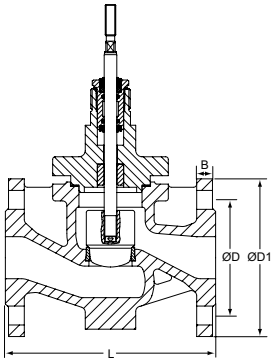

PN 16

DN	D	D1	No of bolts	L	B	Kvs	Kg	Article No
125	210	250	8 x Ø18	400	24	125	61	60-236-191
125	210	250	8 x Ø18	400	24	160	61	60-236-291
125	210	250	8 x Ø18	400	24	200	61	60-236-391
125	210	250	8 x Ø18	400	24	250	61	60-236-491
150	240	285	8 x Ø22	480	24	200	93	60-236-192
150	240	285	8 x Ø22	480	24	250	93	60-236-292
150	240	285	8 x Ø22	480	24	315	93	60-236-392
150	240	285	8 x Ø22	480	24	400	93	60-236-492
200	295	340	12 x Ø22	600	30	315	230	60-236-193
200	295	340	12 x Ø22	600	30	400	230	60-236-293
200	295	340	12 x Ø22	600	30	500	230	60-236-393
200	295	340	12 x Ø22	600	30	630	230	60-236-493
250	355	405	12 x Ø26	730	32	400	290	60-236-194
250	355	405	12 x Ø26	730	32	500	290	60-236-294
250	355	405	12 x Ø26	730	32	630	290	60-236-394
250	355	405	12 x Ø26	730	32	800	290	60-236-494
250	355	405	12 x Ø26	730	32	1000	290	60-236-994
300	410	460	12 x Ø26	850	32	630	380	60-236-195
300	410	460	12 x Ø26	850	32	800	380	60-236-295
300	410	460	12 x Ø26	850	32	1000	380	60-236-395
300	410	460	12 x Ø26	850	32	1250	380	60-236-495

CV316 (3-way)

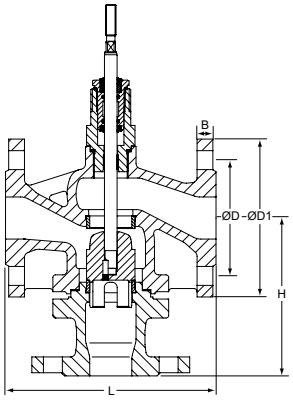

PN 16

DN	D	D1	No of bolts	L	H	B	Kvs	Kg	Article No
15	65	95	4 x Ø14	130	130	16	2,5	4	60-336-815
15	65	95	4 x Ø14	130	130	16	4	4	60-336-915
20	75	105	4 x Ø14	150	130	16	2,5	6	60-336-120
20	75	105	4 x Ø14	150	130	16	4	6	60-336-220
20	75	105	4 x Ø14	150	130	16	5	6	60-336-320
20	75	105	4 x Ø14	150	130	16	6,3	6	60-336-420
25	85	115	4 x Ø14	160	130	18	5	7	60-336-125
25	85	115	4 x Ø14	160	130	18	6,3	7	60-336-225
25	85	115	4 x Ø14	160	130	18	8	7	60-336-325
25	85	115	4 x Ø14	160	130	18	10	7	60-336-425
32	100	140	4 x Ø18	180	150	18	8	8	60-336-132
32	100	140	4 x Ø18	180	150	18	10	8	60-336-232
32	100	140	4 x Ø18	180	150	18	12,5	8	60-336-332
32	100	140	4 x Ø18	180	150	18	16	8	60-336-432
40	110	150	4 x Ø18	200	150	18	12,5	11	60-336-140
40	110	150	4 x Ø18	200	150	18	16	11	60-336-240
40	110	150	4 x Ø18	200	150	18	20	11	60-336-340
40	110	150	4 x Ø18	200	150	18	25	11	60-336-440
50	125	165	4 x Ø18	230	160	20	20	13	60-336-150
50	125	165	4 x Ø18	230	160	20	25	13	60-336-250
50	125	165	4 x Ø18	230	160	20	31,5	13	60-336-350
50	125	165	4 x Ø18	230	160	20	40	13	60-336-450
65	145	185	4 x Ø18	290	170	20	31,5	17	60-336-165
65	145	185	4 x Ø18	290	170	20	40	17	60-336-265
65	145	185	4 x Ø18	290	170	20	50	17	60-336-365
65	145	185	4 x Ø18	290	170	20	63	17	60-336-465
80	160	200	8 x Ø18	310	215	20	50	30	60-336-180
80	160	200	8 x Ø18	310	215	20	63	30	60-336-280
80	160	200	8 x Ø18	310	215	20	80	30	60-336-380
80	160	200	8 x Ø18	310	215	20	100	30	60-336-480
100	180	220	8 x Ø18	350	215	22	80	42	60-336-190
100	180	220	8 x Ø18	350	215	22	100	42	60-336-290
100	180	220	8 x Ø18	350	215	22	125	42	60-336-390
100	180	220	8 x Ø18	350	215	22	160	42	60-336-490
125	210	250	8 x Ø18	400	260	24	125	61	60-336-191
125	210	250	8 x Ø18	400	260	24	160	61	60-336-291
125	210	250	8 x Ø18	400	260	24	200	61	60-336-391
125	210	250	8 x Ø18	400	260	24	250	61	60-336-491
150	240	285	8 x Ø22	480	280	24	200	93	60-336-192
150	240	285	8 x Ø22	480	280	24	250	93	60-336-292
150	240	285	8 x Ø22	480	280	24	315	93	60-336-392
150	240	285	8 x Ø22	480	280	24	400	93	60-336-492
200	295	340	12 x Ø22	600	400	30	315	230	60-336-193
200	295	340	12 x Ø22	600	400	30	400	230	60-336-293
200	295	340	12 x Ø22	600	400	30	500	230	60-336-393
200	295	340	12 x Ø22	600	400	30	630	230	60-336-493
250	355	405	12 x Ø26	730	450	32	400	290	60-336-194
250	355	405	12 x Ø26	730	450	32	500	290	60-336-294
250	355	405	12 x Ø26	730	450	32	630	290	60-336-394
250	355	405	12 x Ø26	730	450	32	800	290	60-336-494
250	355	405	12 x Ø26	730	450	32	1000	290	60-336-994
300	410	460	12 x Ø26	850	550	32	630	380	60-336-195
300	410	460	12 x Ø26	850	550	32	800	380	60-336-295
300	410	460	12 x Ø26	850	550	32	1000	380	60-336-395
300	410	460	12 x Ø26	850	550	32	1250	380	60-336-495

CV225 (2-way)

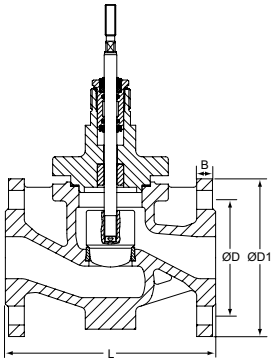

PN 16-40

DN	D	D1	No of bolts	L	B	Kvs	Kg	Article No
15	65	95	4 x Ø14	130	16	0,16	4	60-246-115
15	65	95	4 x Ø14	130	16	0,25	4	60-246-215
15	65	95	4 x Ø14	130	16	0,4	4	60-246-315
15	65	95	4 x Ø14	130	16	0,63	4	60-246-415
15	65	95	4 x Ø14	130	16	1	4	60-246-515
15	65	95	4 x Ø14	130	16	1,25	4	60-246-615
15	65	95	4 x Ø14	130	16	1,6	4	60-246-715
15	65	95	4 x Ø14	130	16	2,5	4	60-246-815
15	65	95	4 x Ø14	130	16	4	4	60-246-915
20	75	105	4 x Ø14	150	16	2,5	6	60-246-120
20	75	105	4 x Ø14	150	16	4	6	60-246-220
20	75	105	4 x Ø14	150	16	5	6	60-246-320
20	75	105	4 x Ø14	150	16	6,3	6	60-246-420
25	85	115	4 x Ø14	160	18	5	7	60-246-125
25	85	115	4 x Ø14	160	18	6,3	7	60-246-225
25	85	115	4 x Ø14	160	18	8	7	60-246-325
25	85	115	4 x Ø14	160	18	10	7	60-246-425
32	100	140	4 x Ø18	180	18	8	8	60-246-132
32	100	140	4 x Ø18	180	18	10	8	60-246-232
32	100	140	4 x Ø18	180	18	12,5	8	60-246-332
32	100	140	4 x Ø18	180	18	16	8	60-246-432
40	110	150	4 x Ø18	200	18	12,5	11	60-246-140
40	110	150	4 x Ø18	200	18	16	11	60-246-240
40	110	150	4 x Ø18	200	18	20	11	60-246-340
40	110	150	4 x Ø18	200	18	25	11	60-246-440
50	125	165	4 x Ø18	230	20	20	13	60-246-150
50	125	165	4 x Ø18	230	20	25	13	60-246-250
50	125	165	4 x Ø18	230	20	31,5	13	60-246-350
50	125	165	4 x Ø18	230	20	40	13	60-246-450
80	160	200	8 x Ø18	310	20	50	30	60-246-180
80	160	200	8 x Ø18	310	20	63	30	60-246-280
80	160	200	8 x Ø18	310	20	80	30	60-246-380
80	160	200	8 x Ø18	310	20	100	30	60-246-480

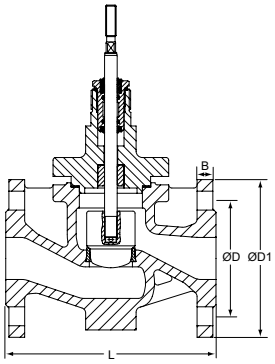

PN 16

DN	D	D1	No of bolts	L	B	Kvs	Kg	Article No
65	145	185	4 x Ø18	290	20	31,5	17	60-246-565
65	145	185	4 x Ø18	290	20	40	17	60-246-665
65	145	185	4 x Ø18	290	20	50	17	60-246-765
65	145	185	4 x Ø18	290	20	63	17	60-246-865
100	180	220	8 x Ø18	350	22	80	42	60-246-590
100	180	220	8 x Ø18	350	22	100	42	60-246-690
100	180	220	8 x Ø18	350	22	125	42	60-246-790
100	180	220	8 x Ø18	350	22	160	42	60-246-890
125	210	250	8 x Ø18	400	24	125	61	60-246-591
125	210	250	8 x Ø18	400	24	160	61	60-246-691
125	210	250	8 x Ø18	400	24	200	61	60-246-791
125	210	250	8 x Ø18	400	24	250	61	60-246-891
150	240	285	8 x Ø22	480	24	200	93	60-246-592
150	240	285	8 x Ø22	480	24	250	93	60-246-692
150	240	285	8 x Ø22	480	24	315	93	60-246-792
150	240	285	8 x Ø22	480	24	400	93	60-246-892
200	295	340	12 x Ø22	600	30	315	230	60-246-193
200	295	340	12 x Ø22	600	30	400	230	60-246-293
200	295	340	12 x Ø22	600	30	500	230	60-246-393
200	295	340	12 x Ø22	600	30	630	230	60-246-493

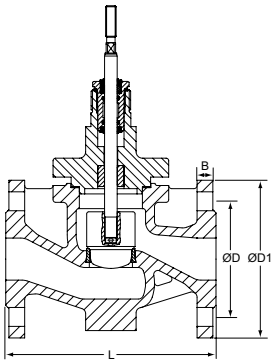

PN 25-40

DN	D	D1	No of bolts	L	B	Kvs	Kg	Article No
65	145	185	8 x Ø18	290	20	31,5	17	60-246-165
65	145	185	8 x Ø18	290	20	40	17	60-246-265
65	145	185	8 x Ø18	290	20	50	17	60-246-365
65	145	185	8 x Ø18	290	20	63	17	60-246-465
100	190	235	8 x Ø22	350	22	80	42	60-246-190
100	190	235	8 x Ø22	350	22	100	42	60-246-290
100	190	235	8 x Ø22	350	22	125	42	60-246-390
100	190	235	8 x Ø22	350	22	160	42	60-246-490
125	220	270	8 x Ø26	400	24	125	61	60-246-191
125	220	270	8 x Ø26	400	24	160	61	60-246-291
125	220	270	8 x Ø26	400	24	200	61	60-246-391
125	220	270	8 x Ø26	400	24	250	61	60-246-491

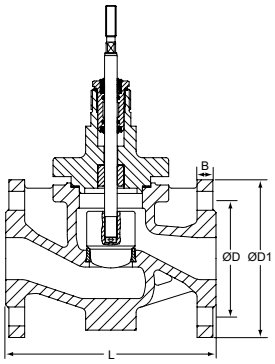

PN 25

DN	D	D1	No of bolts	L	B	Kvs	Kg	Article No
150	250	300	8 x Ø26	480	24	200	93	60-246-192
150	250	300	8 x Ø26	480	24	250	93	60-246-292
150	250	300	8 x Ø26	480	24	315	93	60-246-392
150	250	300	8 x Ø26	480	24	400	93	60-246-492

CV325 (3-way)

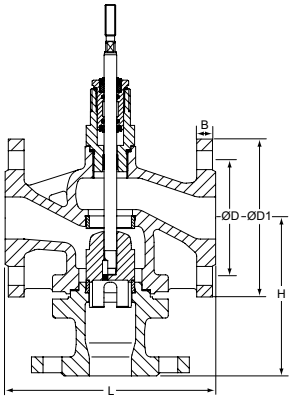

PN 16-40

DN	D	D1	No of bolts	L	H	B	Kvs	Kg	Article No
15	65	95	4 x Ø14	130	130	16	2,5	5	60-346-115
15	65	95	4 x Ø14	130	130	16	4	5	60-346-215
20	75	105	4 x Ø14	150	130	16	2,5	6	60-346-120
20	75	105	4 x Ø14	150	130	16	4	6	60-346-220
20	75	105	4 x Ø14	150	130	16	5	6	60-346-320
20	75	105	4 x Ø14	150	130	16	6,3	6	60-346-420
25	85	115	4 x Ø14	160	130	18	5	8	60-346-125
25	85	115	4 x Ø14	160	130	18	6,3	8	60-346-225
25	85	115	4 x Ø14	160	130	18	8	8	60-346-325
25	85	115	4 x Ø14	160	130	18	10	8	60-346-425
32	100	140	4 x Ø18	180	150	18	8	10	60-346-132
32	100	140	4 x Ø18	180	150	18	10	10	60-346-232
32	100	140	4 x Ø18	180	150	18	12,5	10	60-346-332
32	100	140	4 x Ø18	180	150	18	16	10	60-346-432
40	110	150	4 x Ø18	200	150	18	12,5	12	60-346-140
40	110	150	4 x Ø18	200	150	18	16	12	60-346-240
40	110	150	4 x Ø18	200	150	18	20	12	60-346-340
40	110	150	4 x Ø18	200	150	18	25	12	60-346-440
50	125	165	4 x Ø18	230	160	20	20	16	60-346-150
50	125	165	4 x Ø18	230	160	20	25	16	60-346-250
50	125	165	4 x Ø18	230	160	20	31,5	16	60-346-350
50	125	165	4 x Ø18	230	160	20	40	16	60-346-450
80	160	200	8 x Ø18	310	215	20	50	30	60-346-180
80	160	200	8 x Ø18	310	215	20	63	30	60-346-280
80	160	200	8 x Ø18	310	215	20	80	30	60-346-380
80	160	200	8 x Ø18	310	215	20	100	30	60-346-480

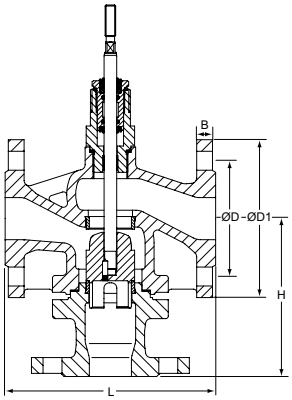

PN 16

DN	D	D1	No of bolts	L	H	B	Kvs	Kg	Article No
65	145	185	4 x Ø18	290	170	20	31,5	20	60-346-565
65	145	185	4 x Ø18	290	170	20	40	17	60-346-665
65	145	185	4 x Ø18	290	170	20	50	17	60-346-765
65	145	185	4 x Ø18	290	170	20	63	17	60-346-865
100	180	220	8 x Ø18	350	215	22	80	42	60-346-590
100	180	220	8 x Ø18	350	215	22	100	42	60-346-690
100	180	220	8 x Ø18	350	215	22	125	42	60-346-790
100	180	220	8 x Ø18	350	215	22	160	42	60-346-890
125	210	250	8 x Ø18	400	260	24	125	61	60-346-591
125	210	250	8 x Ø18	400	260	24	160	61	60-346-691
125	210	250	8 x Ø18	400	260	24	200	61	60-346-791
125	210	250	8 x Ø18	400	260	24	250	61	60-346-891
150	240	285	8 x Ø22	480	280	24	200	93	60-346-592
150	240	285	8 x Ø22	480	280	24	250	93	60-346-692
150	240	285	8 x Ø22	480	280	24	315	93	60-346-792
150	240	285	8 x Ø22	480	280	24	400	93	60-346-892
200	295	340	12 x Ø22	600	400	30	315	230	60-346-193
200	295	340	12 x Ø22	600	400	30	400	230	60-346-293
200	295	340	12 x Ø22	600	400	30	500	230	60-346-393
200	295	340	12 x Ø22	600	400	30	630	230	60-346-493

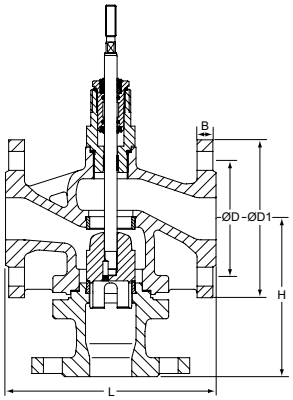

PN 25-40

DN	D	D1	No of bolts	L	H	B	Kvs	Kg	Article No
65	145	185	8 x Ø18	290	170	20	31,5	20	60-346-165
65	145	185	8 x Ø18	290	170	20	40	20	60-346-265
65	145	185	8 x Ø18	290	170	20	50	20	60-346-365
65	145	185	8 x Ø18	290	170	20	63	20	60-346-465
100	190	235	8 x Ø22	350	215	22	80	42	60-346-190
100	190	235	8 x Ø22	350	215	22	100	42	60-346-290
100	190	235	8 x Ø22	350	215	22	125	42	60-346-390
100	190	235	8 x Ø22	350	215	22	160	42	60-346-490
125	220	270	8 x Ø26	400	260	24	125	61	60-346-191
125	220	270	8 x Ø26	400	260	24	160	61	60-346-291
125	220	270	8 x Ø26	400	260	24	200	61	60-346-391
125	220	270	8 x Ø26	400	260	24	250	61	60-346-491

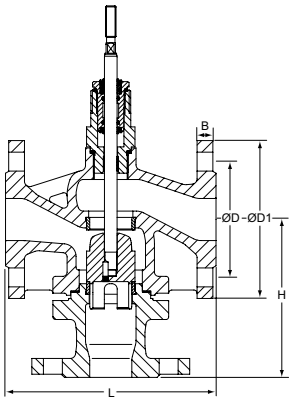

PN 25

DN	D	D1	No of bolts	L	H	B	Kvs	Kg	Article No
150	250	300	8 x Ø26	480	280	24	200	104	60-346-192
150	250	300	8 x Ø26	480	280	24	250	104	60-346-292
150	250	300	8 x Ø26	480	280	24	315	104	60-346-392
150	250	300	8 x Ø26	480	280	24	400	104	60-346-492

CV240S (2-way)

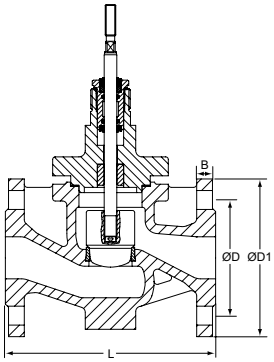

PN 40

DN	D	D1	No of bolts	L	B	Kvs	Kg	Article No
15	65	95	4 x Ø14	130	16	0,16	7	60-258-115
15	65	95	4 x Ø14	130	16	0,25	7	60-258-215
15	65	95	4 x Ø14	130	16	0,4	7	60-258-315
15	65	95	4 x Ø14	130	16	0,63	7	60-258-415
15	65	95	4 x Ø14	130	16	1	7	60-258-515
15	65	95	4 x Ø14	130	16	1,25	7	60-258-615
15	65	95	4 x Ø14	130	16	1,6	7	60-258-715
15	65	95	4 x Ø14	130	16	2,5	7	60-258-815
15	65	95	4 x Ø14	130	16	4	7	60-258-915
20	75	105	4 x Ø14	150	18	2,5	8	60-258-120
20	75	105	4 x Ø14	150	18	4	8	60-258-220
20	75	105	4 x Ø14	150	18	5	8	60-258-320
20	75	105	4 x Ø14	150	18	6,3	8	60-258-420
25	85	115	4 x Ø14	160	18	5	10	60-258-125
25	85	115	4 x Ø14	160	18	6,3	10	60-258-225
25	85	115	4 x Ø14	160	18	8	10	60-258-325
25	85	115	4 x Ø14	160	18	10	10	60-258-425
32	100	140	4 x Ø18	180	18	8	13	60-258-132
32	100	140	4 x Ø18	180	18	10	13	60-258-232
32	100	140	4 x Ø18	180	18	12,5	13	60-258-332
32	100	140	4 x Ø18	180	18	16	13	60-258-432
40	110	150	4 x Ø18	200	18	12,5	14	60-258-140
40	110	150	4 x Ø18	200	18	16	14	60-258-240
40	110	150	4 x Ø18	200	18	20	14	60-258-340
40	110	150	4 x Ø18	200	18	25	14	60-258-440
50	125	165	4 x Ø18	230	20	20	19	60-258-150
50	125	165	4 x Ø18	230	20	25	19	60-258-250
50	125	165	4 x Ø18	230	20	31,5	19	60-258-350
50	125	165	4 x Ø18	230	20	40	19	60-258-450
65	145	185	8 x Ø18	290	22	31,5	27	60-258-165
65	145	185	8 x Ø18	290	22	40	27	60-258-265
65	145	185	8 x Ø18	290	22	50	27	60-258-365
65	145	185	8 x Ø18	290	22	63	27	60-258-465
80	160	200	8 x Ø18	310	24	50	38	60-258-180
80	160	200	8 x Ø18	310	24	63	38	60-258-280
80	160	200	8 x Ø18	310	24	80	38	60-258-380
80	160	200	8 x Ø18	310	24	100	38	60-258-480
100	190	235	8 x Ø22	350	24	80	53	60-258-190
100	190	235	8 x Ø22	350	24	100	53	60-258-290
100	190	235	8 x Ø22	350	24	125	53	60-258-390
100	190	235	8 x Ø22	350	24	160	53	60-258-490
125	220	270	8 x Ø26	400	26	125	67	60-258-191
125	220	270	8 x Ø26	400	26	160	67	60-258-291
125	220	270	8 x Ø26	400	26	200	67	60-258-391
125	220	270	8 x Ø26	400	26	250	67	60-258-491
150	250	300	8 x Ø26	480	28	200	102	60-258-192
150	250	300	8 x Ø26	480	28	250	102	60-258-292
150	250	300	8 x Ø26	480	28	315	102	60-258-392
150	250	300	8 x Ø26	480	28	400	102	60-258-492
200	320	375	12 x Ø30	600	34	315	260	60-258-193
200	320	375	12 x Ø30	600	34	400	260	60-258-293
200	320	375	12 x Ø30	600	34	500	260	60-258-393
200	320	375	12 x Ø30	600	34	630	260	60-258-493
250	385	450	12 x Ø33	730	38	400	355	60-258-194
250	385	450	12 x Ø33	730	38	500	355	60-258-294
250	385	450	12 x Ø33	730	38	630	355	60-258-394
250	385	450	12 x Ø33	730	38	800	355	60-258-494
250	385	450	12 x Ø33	730	38	1000	355	60-258-994
300	450	515	16 x Ø33	850	42	630	460	60-258-195
300	450	515	16 x Ø33	850	42	800	460	60-258-295
300	450	515	16 x Ø33	850	42	1000	460	60-258-395
300	450	515	16 x Ø33	850	42	1250	460	60-258-495

CV340S (3-way)

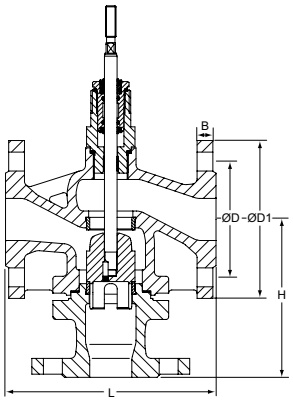

PN 40

DN	D	D1	No of bolts	L	H	B	Kvs	Kg	Article No
15	65	95	4 x Ø14	130	130	16	2,5	8	60-358-115
15	65	95	4 x Ø14	130	130	16	4	8	60-358-215
20	75	105	4 x Ø14	150	130	18	2,5	9	60-358-120
20	75	105	4 x Ø14	150	130	18	4	9	60-358-220
20	75	105	4 x Ø14	150	130	18	5	9	60-358-320
20	75	105	4 x Ø14	150	130	18	6,3	9	60-358-420
25	85	115	4 x Ø14	160	130	18	5	11	60-358-125
25	85	115	4 x Ø14	160	130	18	6,3	11	60-358-225
25	85	115	4 x Ø14	160	130	18	8	11	60-358-325
25	85	115	4 x Ø14	160	130	18	10	11	60-358-425
32	100	140	4 x Ø18	180	150	18	8	16	60-358-132
32	100	140	4 x Ø18	180	150	18	10	16	60-358-232
32	100	140	4 x Ø18	180	150	18	12,5	16	60-358-332
32	100	140	4 x Ø18	180	150	18	16	16	60-358-432
40	110	150	4 x Ø18	200	150	18	12,5	17	60-358-140
40	110	150	4 x Ø18	200	150	18	16	17	60-358-240
40	110	150	4 x Ø18	200	150	18	20	17	60-358-340
40	110	150	4 x Ø18	200	150	18	25	17	60-358-440
50	125	165	4 x Ø18	230	160	20	20	22	60-358-150
50	125	165	4 x Ø18	230	160	20	25	22	60-358-250
50	125	165	4 x Ø18	230	160	20	31,5	22	60-358-350
50	125	165	4 x Ø18	230	160	20	40	22	60-358-450
65	145	185	8 x Ø18	290	170	22	31,5	33	60-358-165
65	145	185	8 x Ø18	290	170	22	40	33	60-358-265
65	145	185	8 x Ø18	290	170	22	50	33	60-358-365
65	145	185	8 x Ø18	290	170	22	63	33	60-358-465
80	160	200	8 x Ø18	310	215	24	50	45	60-358-180
80	160	200	8 x Ø18	310	215	24	63	45	60-358-280
80	160	200	8 x Ø18	310	215	24	80	45	60-358-380
80	160	200	8 x Ø18	310	215	24	100	45	60-358-480
100	190	235	8 x Ø22	350	215	24	80	58	60-358-190
100	190	235	8 x Ø22	350	215	24	100	58	60-358-290
100	190	235	8 x Ø22	350	215	24	125	58	60-358-390
100	190	235	8 x Ø22	350	215	24	160	58	60-358-490
125	220	270	8 x Ø26	400	260	26	125	79	60-358-191
125	220	270	8 x Ø26	400	260	26	160	79	60-358-291
125	220	270	8 x Ø26	400	260	26	200	79	60-358-391
125	220	270	8 x Ø26	400	260	26	250	79	60-358-491
150	250	300	8 x Ø26	480	280	28	200	121	60-358-192
150	250	300	8 x Ø26	480	280	28	250	121	60-358-292
150	250	300	8 x Ø26	480	280	28	315	121	60-358-392
150	250	300	8 x Ø26	480	280	28	400	121	60-358-492
200	320	375	12 x Ø30	600	400	34	315	300	60-358-193
200	320	375	12 x Ø30	600	400	34	400	300	60-358-293
200	320	375	12 x Ø30	600	400	34	500	300	60-358-393
200	320	375	12 x Ø30	600	400	34	630	300	60-358-493
250	385	450	12 x Ø33	730	450	38	400	415	60-358-194
250	385	450	12 x Ø33	730	450	38	500	415	60-358-294
250	385	450	12 x Ø33	730	450	38	630	415	60-358-394
250	385	450	12 x Ø33	730	450	38	800	415	60-358-494
250	385	450	12 x Ø33	730	450	38	1000	415	60-358-994
300	450	515	16 x Ø33	850	550	42	630	540	60-358-195
300	450	515	16 x Ø33	850	550	42	800	540	60-358-295
300	450	515	16 x Ø33	850	550	42	1000	540	60-358-395
300	450	515	16 x Ø33	850	550	42	1250	540	60-358-495

CV240E (2-way)

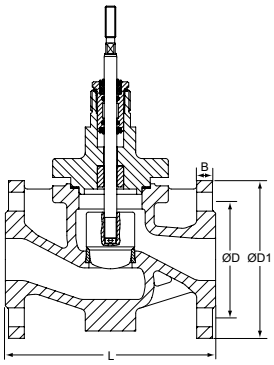

PN 40

DN	D	D1	No of bolts	L	B	Kvs	Kg	Article No
15	65	95	4 x Ø14	130	16	0,16	7	60-259-115
15	65	95	4 x Ø14	130	16	0,25	7	60-259-215
15	65	95	4 x Ø14	130	16	0,4	7	60-259-315
15	65	95	4 x Ø14	130	16	0,63	7	60-259-415
15	65	95	4 x Ø14	130	16	1	7	60-259-515
15	65	95	4 x Ø14	130	16	1,25	7	60-259-615
15	65	95	4 x Ø14	130	16	1,6	7	60-259-715
15	65	95	4 x Ø14	130	16	2,5	7	60-259-815
15	65	95	4 x Ø14	130	16	4	7	60-259-915
20	75	105	4 x Ø14	150	18	2,5	8	60-259-120
20	75	105	4 x Ø14	150	18	4	8	60-259-220
20	75	105	4 x Ø14	150	18	5	8	60-259-320
20	75	105	4 x Ø14	150	18	6,3	8	60-259-420
25	85	115	4 x Ø14	160	18	5	10	60-259-125
25	85	115	4 x Ø14	160	18	6,3	10	60-259-225
25	85	115	4 x Ø14	160	18	8	10	60-259-325
25	85	115	4 x Ø14	160	18	10	10	60-259-425
32	100	140	4 x Ø18	180	18	8	13	60-259-132
32	100	140	4 x Ø18	180	18	10	13	60-259-232
32	100	140	4 x Ø18	180	18	12,5	13	60-259-332
32	100	140	4 x Ø18	180	18	16	13	60-259-432
40	110	150	4 x Ø18	200	18	12,5	14	60-259-140
40	110	150	4 x Ø18	200	18	16	14	60-259-240
40	110	150	4 x Ø18	200	18	20	14	60-259-340
40	110	150	4 x Ø18	200	18	25	14	60-259-440
50	125	165	4 x Ø18	230	20	20	19	60-259-150
50	125	165	4 x Ø18	230	20	25	19	60-259-250
50	125	165	4 x Ø18	230	20	31,5	19	60-259-350
50	125	165	4 x Ø18	230	20	40	19	60-259-450
65	145	185	8 x Ø18	290	22	31,5	27	60-259-165
65	145	185	8 x Ø18	290	22	40	27	60-259-265
65	145	185	8 x Ø18	290	22	50	27	60-259-365
65	145	185	8 x Ø18	290	22	63	27	60-259-465
80	160	200	8 x Ø18	310	24	50	38	60-259-180
80	160	200	8 x Ø18	310	24	63	38	60-259-280
80	160	200	8 x Ø18	310	24	80	38	60-259-380
80	160	200	8 x Ø18	310	24	100	38	60-259-480
100	190	235	8 x Ø22	350	24	80	53	60-259-190
100	190	235	8 x Ø22	350	24	100	53	60-259-290
100	190	235	8 x Ø22	350	24	125	53	60-259-390
100	190	235	8 x Ø22	350	24	160	53	60-259-490
125	220	270	8 x Ø26	400	26	125	67	60-259-191
125	220	270	8 x Ø26	400	26	160	67	60-259-291
125	220	270	8 x Ø26	400	26	200	67	60-259-391
125	220	270	8 x Ø26	400	26	250	67	60-259-491
150	250	300	8 x Ø26	480	28	200	102	60-259-192
150	250	300	8 x Ø26	480	28	250	102	60-259-292
150	250	300	8 x Ø26	480	28	315	102	60-259-392
150	250	300	8 x Ø26	480	28	400	102	60-259-492
200	320	375	12 x Ø30	600	34	315	260	60-259-193
200	320	375	12 x Ø30	600	34	400	260	60-259-293
200	320	375	12 x Ø30	600	34	500	260	60-259-393
200	320	375	12 x Ø30	600	34	630	260	60-259-493
250	385	450	12 x Ø33	730	38	400	355	60-259-194
250	385	450	12 x Ø33	730	38	500	355	60-259-294
250	385	450	12 x Ø33	730	38	630	355	60-259-394
250	385	450	12 x Ø33	730	38	800	355	60-259-494
250	385	450	12 x Ø33	730	38	1000	355	60-259-994
300	450	515	16 x Ø33	850	42	630	460	60-259-195
300	450	515	16 x Ø33	850	42	800	460	60-259-295
300	450	515	16 x Ø33	850	42	1000	460	60-259-395
300	450	515	16 x Ø33	850	42	1250	460	60-259-495

CV340E (3-way)

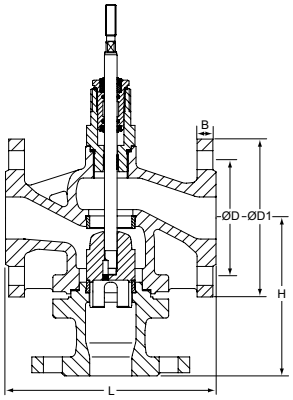

PN 40

DN	D	D1	No of bolts	L	H	B	Kvs	Kg	Article No
15	65	95	4 x Ø14	130	130	16	2,5	8	60-359-115
15	65	95	4 x Ø14	130	130	16	4	8	60-359-215
20	75	105	4 x Ø14	150	130	18	2,5	9	60-359-120
20	75	105	4 x Ø14	150	130	18	4	9	60-359-220
20	75	105	4 x Ø14	150	130	18	5	9	60-359-320
20	75	105	4 x Ø14	150	130	18	6,3	9	60-359-420
25	85	115	4 x Ø14	160	130	18	5	11	60-359-125
25	85	115	4 x Ø14	160	130	18	6,3	11	60-359-225
25	85	115	4 x Ø14	160	130	18	8	11	60-359-325
25	85	115	4 x Ø14	160	130	18	10	11	60-359-425
32	100	140	4 x Ø18	180	150	18	8	16	60-359-132
32	100	140	4 x Ø18	180	150	18	10	16	60-359-232
32	100	140	4 x Ø18	180	150	18	12,5	16	60-359-332
32	100	140	4 x Ø18	180	150	18	16	16	60-359-432
40	110	150	4 x Ø18	200	150	18	12,5	17	60-359-140
40	110	150	4 x Ø18	200	150	18	16	17	60-359-240
40	110	150	4 x Ø18	200	150	18	20	17	60-359-340
40	110	150	4 x Ø18	200	150	18	25	17	60-359-440
50	125	165	4 x Ø18	230	160	20	20	22	60-359-150
50	125	165	4 x Ø18	230	160	20	25	22	60-359-250
50	125	165	4 x Ø18	230	160	20	31,5	22	60-359-350
50	125	165	4 x Ø18	230	160	20	40	22	60-359-450
65	145	185	8 x Ø18	290	170	22	31,5	33	60-359-165
65	145	185	8 x Ø18	290	170	22	40	33	60-359-265
65	145	185	8 x Ø18	290	170	22	50	33	60-359-365
65	145	185	8 x Ø18	290	170	22	63	33	60-359-465
80	160	200	8 x Ø18	310	215	24	50	45	60-359-180
80	160	200	8 x Ø18	310	215	24	63	45	60-359-280
80	160	200	8 x Ø18	310	215	24	80	45	60-359-380
80	160	200	8 x Ø18	310	215	24	100	45	60-359-480
100	190	235	8 x Ø22	350	215	24	80	58	60-359-190
100	190	235	8 x Ø22	350	215	24	100	58	60-359-290
100	190	235	8 x Ø22	350	215	24	125	58	60-359-390
100	190	235	8 x Ø22	350	215	24	160	58	60-359-490
125	220	270	8 x Ø26	400	260	26	125	79	60-359-191
125	220	270	8 x Ø26	400	260	26	160	79	60-359-291
125	220	270	8 x Ø26	400	260	26	200	79	60-359-391
125	220	270	8 x Ø26	400	260	26	250	79	60-359-491
150	250	300	8 x Ø26	480	280	28	200	121	60-359-192
150	250	300	8 x Ø26	480	280	28	250	121	60-359-292
150	250	300	8 x Ø26	480	280	28	315	121	60-359-392
150	250	300	8 x Ø26	480	280	28	400	121	60-359-492
200	320	375	12 x Ø30	600	400	34	315	300	60-359-193
200	320	375	12 x Ø30	600	400	34	400	300	60-359-293
200	320	375	12 x Ø30	600	400	34	500	300	60-359-393
200	320	375	12 x Ø30	600	400	34	630	300	60-359-493
250	385	450	12 x Ø33	730	450	38	400	415	60-359-194
250	385	450	12 x Ø33	730	450	38	500	415	60-359-294
250	385	450	12 x Ø33	730	450	38	630	415	60-359-394
250	385	450	12 x Ø33	730	450	38	800	415	60-359-494
250	385	450	12 x Ø33	730	450	38	1000	415	60-359-994
300	450	515	16 x Ø33	850	550	42	630	540	60-359-195
300	450	515	16 x Ø33	850	550	42	800	540	60-359-295
300	450	515	16 x Ø33	850	550	42	1000	540	60-359-395
300	450	515	16 x Ø33	850	550	42	1250	540	60-359-495

Actuators

Type	Power supply	Actuating thrust [kN]	Input signal	For valve (DN)	Article No
MC103/24	24 VAC/DC	1,0	3-point, 0(2)-10V, 4(0)-20 mA	DN 15-40	61-103-001
MC103/230	230 VAC	1,0	3-point, 0(2)-10V, 4(0)-20 mA	DN 15-40	61-103-002
MC163/24	24 VAC/DC	1,6	3-point, 0(2)-10V, 4(0)-20 mA	DN 15-65	61-163-001
MC163/230	230 VAC	1,6	3-point, 0(2)-10V, 4(0)-20 mA	DN 15-65	61-163-002
MC253/24	24 VAC/DC	2,5	3-point, 0(2)-10V, 4(0)-20 mA	DN 15-100	61-253-001
MC253/230	230 VAC	2,5	3-point, 0(2)-10V, 4(0)-20 mA	DN 15-100	61-253-002
MC403/24	24 VAC	4,0	3-point, 0(2)-10V, 4(0)-20 mA	DN 15-100	61-403-001
MC403/230	230 VAC	4,0	3-point, 0(2)-10V, 4(0)-20 mA	DN 15-100	61-403-002
MC403/24	24 VAC	4,0	3-point, 0(2)-10V, 4(0)-20 mA	DN 125-150	61-403-011
MC403/230	230 VAC	4,0	3-point, 0(2)-10V, 4(0)-20 mA	DN 125-150	61-403-012
MC503/24	24 VAC/DC	5,0	3-point, 0(2)-10V, 4(0)-20 mA	DN 15-100	61-503-001
MC503/230	230 VAC	5,0	3-point, 0(2)-10V, 4(0)-20 mA	DN 15-100	61-503-002
MC503/24	24 VAC/DC	5,0	3-point, 0(2)-10V, 4(0)-20 mA	DN 125-150	61-503-011
MC503/230	230 VAC	5,0	3-point, 0(2)-10V, 4(0)-20 mA	DN 125-150	61-503-012
MC1003/24	24 VAC	10,0	3-point, 0(2)-10V, 4(0)-20 mA	DN 65-100	61-003-001
MC1003/230	230 VAC	10,0	3-point, 0(2)-10V, 4(0)-20 mA	DN 65-100	61-003-002
MC1003/24	24 VAC	10,0	3-point, 0(2)-10V, 4(0)-20 mA	DN 125-200	61-003-011
MC1003/230	230 VAC	10,0	3-point, 0(2)-10V, 4(0)-20 mA	DN 125-200	61-003-012
MC1003/24	24 VAC	10,0	3-point, 0(2)-10V, 4(0)-20 mA	DN 250	61-003-021
MC1003/230	230 VAC	10,0	3-point, 0(2)-10V, 4(0)-20 mA	DN 250	61-003-022
MC1503/24	24 VAC	15,0	3-point, 0(2)-10V, 4(0)-20 mA	DN 125-200	61-153-011
MC1503/230	230 VAC	15,0	3-point, 0(2)-10V, 4(0)-20 mA	DN 125-200	61-153-012
MC1503/24	24 VAC	15,0	3-point, 0(2)-10V, 4(0)-20 mA	DN 250-300	61-153-021
MC1503/230	230 VAC	15,0	3-point, 0(2)-10V, 4(0)-20 mA	DN 250-300	61-153-022

The products, texts, photographs, graphics and diagrams in this document may be subject to alteration by IMI Hydronic Engineering without prior notice or reasons being given. For the most up to date information about our products and specifications, please visit www.imi-hydronic.com.