IMI TA

TA-Modulator

Combined control & balancing valves

Pressure independent balancing and control valve for modulating control

Engineering GREAT Solutions

IMI Hydronic Engineering

TA-Modulator

The new uniquely shaped EQM characteristics provide highly precise temperature control. The valve is compatible with linear, proportional or 3-point actuators. A built-in differential pressure controller provides high control authority, control stability and automatic limitation of design flow. Measurement of flow and available pressure enables system optimisation and diagnostics.

Key features

> **Precise temperature control**
Provide uniquely shaped EQM characteristic for best modulating control.

> **Precise control**
Uniquely shaped EQM characteristic provides an up to 6 times larger operating stroke than linear valves.

> **Quick hydronic balancing**
Automatic flow limitation when actuator is fully open protects entire system against overflows.

> **Easy troubleshooting**
Flow and differential pressure measuring helps to reduce pump consumption and provides all necessary data for system diagnostics.

Technical description

Application:
Heating and cooling systems.

Functions:
Control EQM: DN 15-125 normal flow
Control LIN: DN 100-125 high flow
Pre-setting (max. flow)
Differential pressure control
Measuring (ΔH, t, q)
Isolation (for use during system maintenance – see “Leakage rate”)

Dimensions:
DN 15-125

Pressure class:
DN 15-50: PN 16
DN 65-125: PN 16, PN 25

Differential pressure (ΔpV):
Max. differential pressure (ΔpV_{max}):
DN 15-32: 600 kPa = 6 bar
DN 15-25: 400 kPa = 4 bar*
DN 40-50: 400 kPa = 4 bar
DN 65-125: 800 kPa = 8 bar
Min. differential pressure (ΔpV_{min}):
DN 15-20: 15 kPa = 0.15 bar
DN 25-32: 23 kPa = 0.23 bar
DN 40-125: 30 kPa = 0.30 bar
DN 100-125 HF: 55 kPa = 0.55 bar
(Valid for maximum setting, fully open. Other settings will require lower differential pressure, check with the software HySelect.)
ΔpV_{max} = The maximum allowed pressure drop over the valve to fulfill all stated performances.
ΔpV_{min} = The minimum recommended pressure drop over the valve, for proper differential pressure control.
*) With Δp insert in PPS.
HF = High flow

Flow range:
The flow (q_{max}) can be set within the range:
DN 15: 92 - 480 l/h
DN 20: 200 - 975 l/h
DN 25: 340 - 1750 l/h
DN 32: 720 - 3600 l/h
DN 40: 1000 - 6500 l/h
DN 50: 2150 - 11200 l/h
DN 65: 4150 - 24100 l/h
DN 80: 5850 - 37300 l/h
DN 100: 11700 - 51700 l/h
DN 100 HF: 18000 - 75900 l/h
DN 125: 15000 - 77300 l/h
DN 125 HF: 23300 - 127000 l/h
q_{max} = l/h at each setting and fully open valve plug.
HF = High flow

Temperature:
DN 15-32, DN 65-125:
Max. working temperature: 120°C
Min. working temperature: -20°C
DN 15-25 with Δp insert in PPS,
DN 40-50:
Max. working temperature: 90°C
Min. working temperature: -10°C

Media:
Water or neutral fluids, water-glycol mixtures (0-57%).
(For other media contact IMI Hydronic Engineering.)

Lift:
DN 15-20: 4 mm
DN 25-32: 6,5 mm
DN 40-50: 15 mm
DN 65-125: 20 mm

Rangeability:
DN 15-32: >75
DN 40-80: >125
DN 100-125: >150
DN 100-125 HF: >125

Leakage rate:
Leakage flow ≤ 0.01% of max. q_{max} (max. setting) and correct flow direction. (Class IV according to EN 60534-4).

Characteristics:
Uniquely shaped EQM, best suited for modulating control.
DN 100-125 HF: Linear.

Material:
DN 15-32:
Valve body: AMETAL®
Valve insert: AMETAL® and PPS
Valve plug: Stainless steel
Spindle: Stainless steel
Spindle seal: EPDM O-ring
Δp insert: PPS and AMETAL® or PPS
Membrane: EPDM
Springs: Stainless steel
O-rings: EPDM
DN 40-50:
Valve body: AMETAL®
Valve insert: AMETAL®
Valve plug: AMETAL® and PTFE
Spindle: Stainless steel
Spindle seal: EPDM O-ring
Δp insert: PPS
Membrane: EPDM
Springs: Stainless steel
O-rings: EPDM
DN 65-125:
Valve body: Ductile iron EN-GJS-400
Valve insert: Ductile iron EN-GJS-400 and brass
Valve plug: Stainless steel and EPDM O-ring
Valve seat: Stainless steel
Spindle: Stainless steel
Spindle seal: EPDM
Δp insert: Ductile iron EN-GJS-400, stainless steel and brass.
Membrane: Reinforced EPDM
Springs: Stainless steel
O-rings: EPDM

AMETAL® is the dezincification resistant alloy of IMI Hydronic Engineering.

Surface treatment:
DN 32-50: Non treated
DN 65-125: Electrophoretic painting

Marking:
Black identification ring on measuring point: TA-Modulator and DN.
DN 15-32: TA, IMI, PN, DN and flow direction arrow. Grey setting wheel.
DN 40-50: IMI TA, PN, DN, inch size, country of origin and flow direction arrow. Orange setting wheel.
DN 65-125: IMI TA, DN, inch size, material and flow direction arrow. Label with technical specification, country of origin and CE. Orange setting wheel.

Connection:
DN 15-50: Male thread according to ISO 228.
DN 65-125: Flanges according to EN-1092-2, type 21. Face to face length according to EN 558, series 1.

Connection to actuator:
DN 15-32: M30x1.5, push
DN 40-50: M30x1.5, push/pull
DN 65-125: 2xM8, push/pull

Actuators:
DN 15-20:
TA-Slider 160, EMO TM, EMO 3 (3-point).
DN 25-32:
TA-Slider 160, TA-MC50-C* (3-point).
DN 40-50:
TA-Slider 500, TA-Slider 750* (3-point).
DN 65-125:
TA-Slider 750 (3-point), TA-MC100 FSE/FSR (fail-safe).
DN 100-125 HF:
TA-Slider 750 (3-point) ΔpV ≤ 4 bar,
TA-Slider 1250 (3-point) ΔpV ≤ 8 bar,
TA-MC100 FSE/FSR (fail-safe).

*) Adapter needed - see “Adapters for actuators”.
For more details on actuators, see separate technical leaflets.

Valve characteristics

Nominal valve characteristic for all settings

EQM

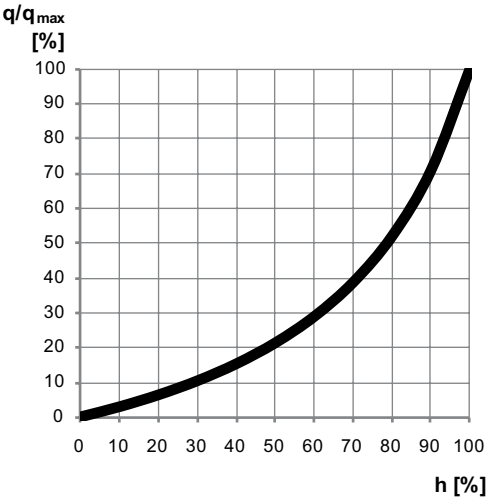

LIN

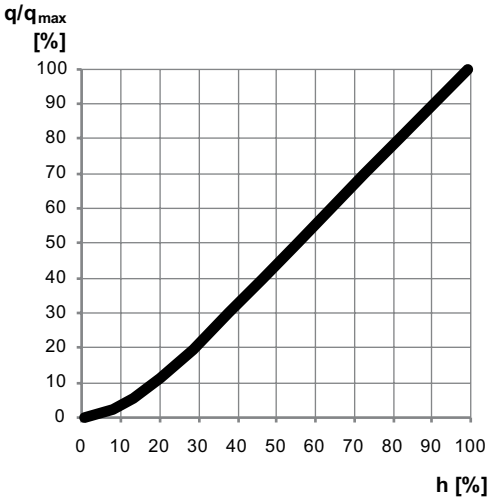

Measuring accuracy

Maximum flow deviation at different settings

DN 15-32 (1/2"-1 1/4")

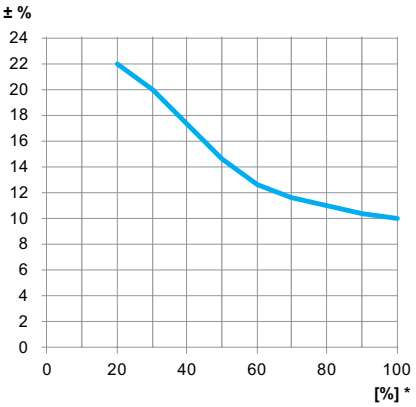

DN 40-125 (1 1/2"-5")

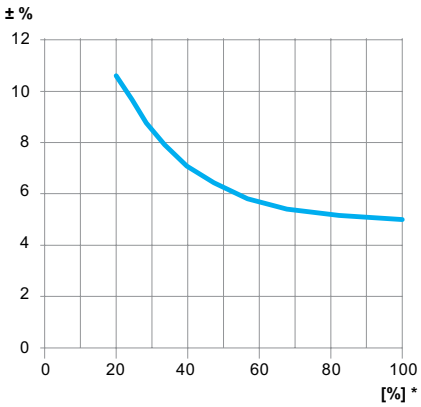

*) Setting (%) of fully open valve.

Correction factors

The flow calculations are valid for water (+20°C). For other liquids with approximately the same viscosity as water (≤20 cSt = 3°E=100S.U.), it is only necessary to compensate for the specific density. However, at low temperatures, the viscosity increases and laminar flow may occur in the valves. This causes a flow deviation that increases with small valves, low settings and low differential pressures. Correction for this deviation can be made with the software HySelect or directly in our balancing instruments.

Noise

In order to avoid noise in the installation, the valve must be correctly installed and the water de-aerated.

Actuators

TA-Modulator is developed to work together with recommended actuators according to table.
See separate catalogue leaflets for more details about the actuators.

Push actuators of other brands require;
Working range
DN 15-20: X (closed - fully open) = 11.6 - 15.85
DN 25-32: X (closed - fully open) = 10.1 - 16.85
Closing force
DN 15-20: Min. 125 N (max. 500 N)
DN 25-32: Min. 190 N (max. 500 N)

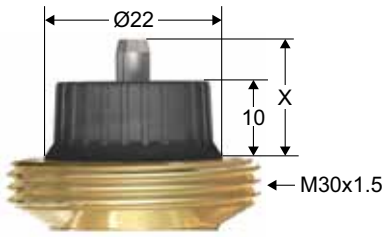

IMI Hydronic Engineering will not be held responsible for the control function if other brands of actuator are used.

Maximum recommended pressure drop (ΔpV) for valve and actuator combination
The maximum recommended pressure drop over a valve and actuator combination for close off (ΔpV_{close}) and to fulfill all stated performances (ΔpV_{max}).

DN	EMO TM [kPa]	EMO 3 [kPa]	TA-Slider 160 [kPa]	TA-MC50-C [kPa]	TA-Slider 500 [kPa]	TA-Slider 750 [kPa]	TA-Slider 1250 [kPa]	TA-MC100 FSE/FSR [kPa]
15	400/600	400/600	400/600	-	-	-	-	-
20	400/600	400/600	400/600	-	-	-	-	-
25	-	-	400/600	400/600	-	-	-	-
32	-	-	600	600	-	-	-	-
40	-	-	-	-	400	400	-	-
50	-	-	-	-	400	400	-	-
65	-	-	-	-	-	800	-	800
80	-	-	-	-	-	800	-	800
100	-	-	-	-	-	800	-	800
100 HF	-	-	-	-	-	400	800	800
125	-	-	-	-	-	800	-	800
125 HF	-	-	-	-	-	400	800	800
Closing force	125 N	150 N	190 N	500 N	500 N	750 N	1250 N	1000 N

ΔpV_{close} = The maximum pressure drop that the valve can close against from an opened position, with a specified force (actuator) without exceeding stated leakage rate.
ΔpV_{max} = The maximum allowed pressure drop over the valve to fulfill all stated performances.
HF = High flow

Sizing

1. Choose the smallest valve size that can obtain the design flow with some safety margin, see "q_{max} values". The setting should be as open as possible.
2. Check that the available ΔpV is within the working range
   15-400/600 kPa,
   23-400/600 kPa,
   30-400 kPa or
   30-800 kPa.

q_{max} values

	Position									
	1	2	3	4	5	6	7	8	9	10
DN 15	92	114	140	170	210	265	325	390	445	480
DN 20	200	260	360	460	565	670	770	850	920	975
DN 25	340	440	600	810	1010	1200	1350	1520	1640	1750
DN 32	720	960	1350	1750	2150	2530	2850	3130	3380	3600

	Position												
	0.8	0.9	1.0	1.1	1.2	1.3	1.4	1.5	1.6	1.7	1.8	1.9	2.0
DN 40	1000	1240	1530	1840	2200	2570	3020	3450	3960	4550	5200	5800	6500
DN 50	2150	2640	3220	3790	4430	5150	5990	6870	7800	8790	9740	10600	11200

	Position												
	2.00	2.25	2.50	2.75	3.00	3.25	3.50	3.75	4.00	4.25	4.50	4.75	5.00
DN 65	-	-	4150	5100	6230	7700	9450	11500	13500	16100	19000	21800	24100
DN 80	-	-	5850	7300	9180	12200	15500	19100	22800	26300	30000	33600	37300
DN 100	11700	14100	16800	19700	22900	26400	30200	34200	38300	42400	46300	49500	51700
DN 125	15000	18800	22800	27400	32100	37100	42400	47700	53400	59100	64700	71000	77300

	Position															
	1.25	1.50	1.75	2.00	2.25	2.50	2.75	3.00	3.25	3.50	3.75	4.00	4.25	4.50	4.75	5.00
DN 100 HF	18000	22600	27000	31200	35300	39300	43400	47500	51600	55700	59700	63600	67300	70700	73600	75900
DN 125 HF	23300	30000	36500	43200	49600	55800	62700	69700	76500	83500	90900	98900	105000	112000	119000	127000

q_{max} = l/h at each setting and fully open valve plug.
HF = High flow

Application example

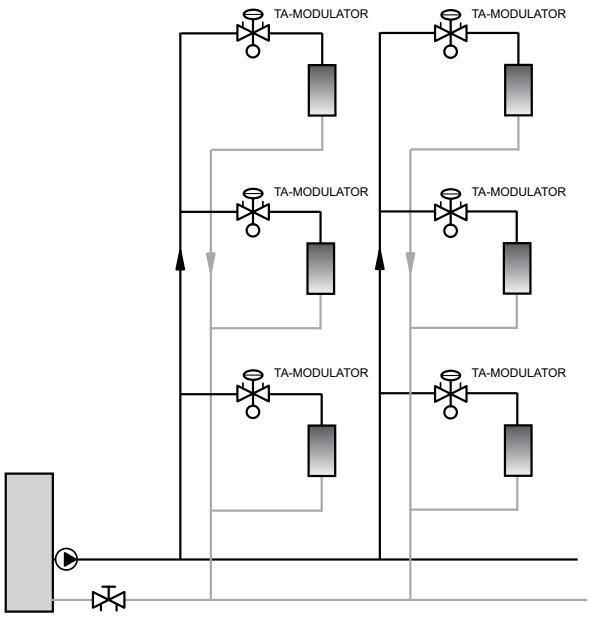

Installation

Flow direction

DN 15-32 **DN 40-50** **DN 65-125**

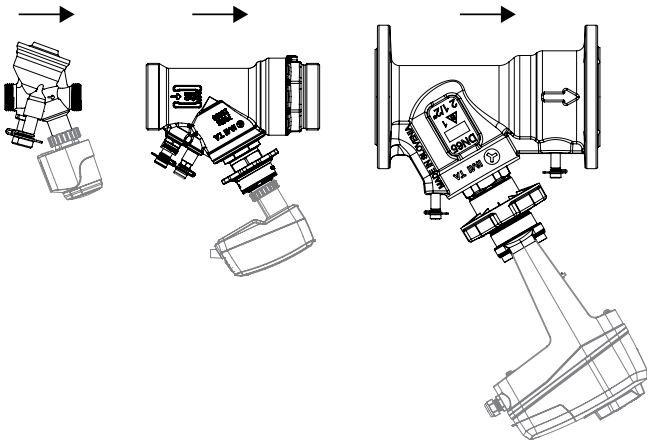

Ingress protection

EMO TM / TA-Slider 160 / TA-Slider 500 / TA-Slider 750 / TA-Slider 1250

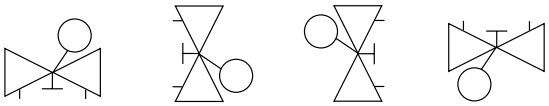

IP54 IP54 IP54 IP54

EMO 3

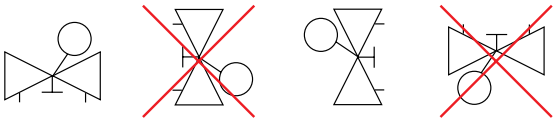

IP42 IP42

TA-MC50-C

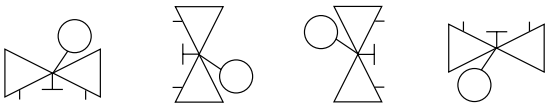

IP40 IP40 IP40 IP40

TA-MC100 FSE/FSR

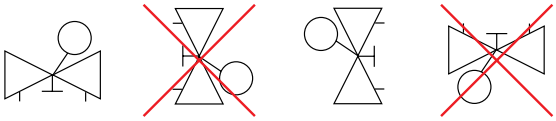

IP54 IP54

Installation of actuator

Note: Free space is required above the actuator for easy mounting/dismounting.

EMO TM

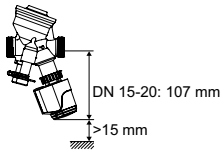

TA-Slider 160

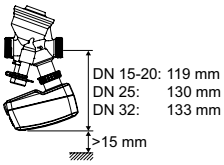

EMO 3

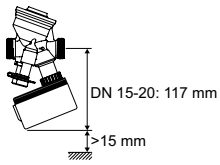

TA-MC50-C

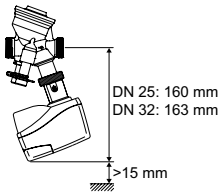

TA-Slider 500/TA-Slider 500 Plus

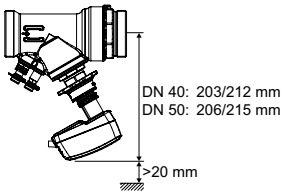

TA-Slider 750/1250 / TA-Slider 750/1250 Plus

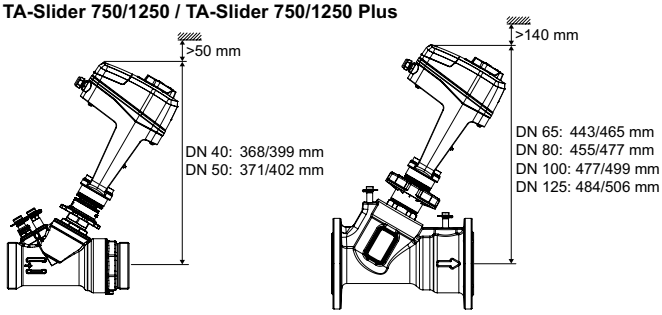

TA-MC100 FSE/FSR

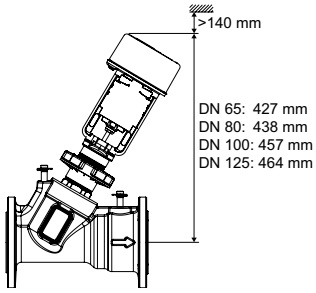

Operating function DN 15-32

Setting

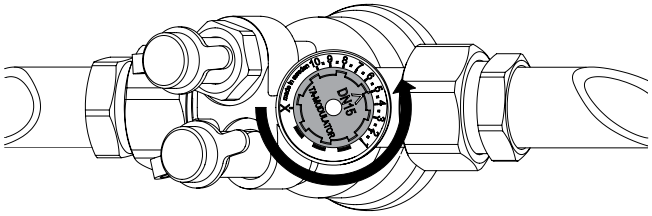

1. Remove the installed actuator.
2. Turn the setting wheel to desired value, e.g. 5.0.

Isolation

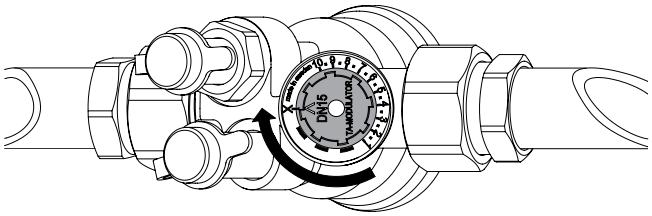

1. Remove the installed actuator.
2. Turn the setting wheel clockwise to X.

Measuring q

1. Remove the installed actuator.
2. Connect the TA balancing instrument to the measuring points.
3. Input the valve type, size and setting and the actual flow is displayed.

Measuring ΔH

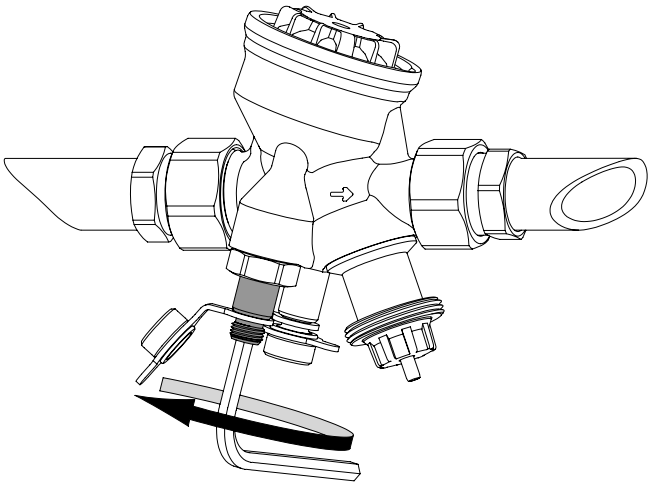

1. Remove the installed actuator.
2. Close the valve according to “Isolation”.
3. Bypass the Δp-part by opening the ΔH spindle (red measuring point) ~1 turn **anticlockwise**, with a 5 mm Allen key.
4. Connect the TA balancing instrument to the measuring points and measure.

Important! After the measurement is completed;

5. Close the ΔH spindle (red measuring point) **clockwise** to stop.
6. Reopen the valve to previous setting.

Measuring temperature

For temperature measurement the **red** measuring point is recommended.

Operating function DN 40-50

Setting

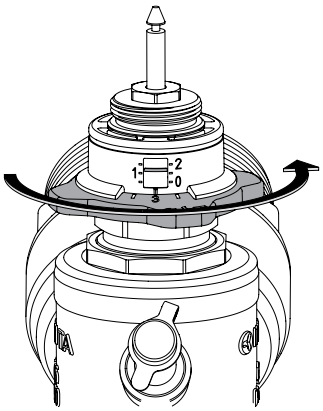

1. Remove the installed actuator.
2. Turn the setting wheel to desired value, e.g. 1.3.

Isolation

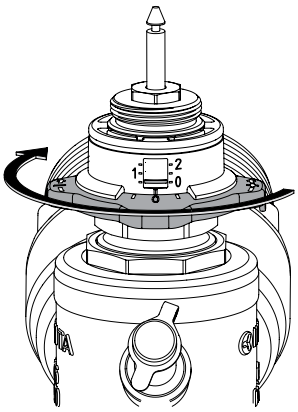

1. Remove the installed actuator.
2. Turn the setting wheel clockwise to stop (position 0 ±0.3).

Measuring q

1. Remove the installed actuator.
2. Connect the TA balancing instrument to the measuring points.
3. Input the valve type, size and setting and the actual flow is displayed.

Measuring ΔH

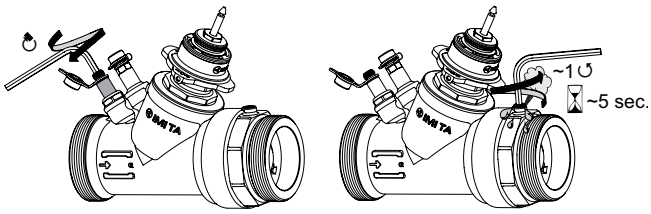

1. Remove the installed actuator.
2. Close the valve according to “Isolation”.
3. Deactivate the Δp-part by closing the ΔH spindle (red measuring point) **clockwise** to stop, with a 5 mm Allen key.
4. Open the venting screw ~1 turn for 5 seconds and then close it (some water leakage can occur).
5. Connect the TA balancing instrument to the measuring points and measure.

Important! After the measurement is completed;

6. Activate the Δp-part by opening the ΔH spindle (red measuring point) **anticlockwise** to stop.
7. Reopen the valve to previous setting.

Measuring temperature

For temperature measurement the **red** measuring point is recommended.

Operating function DN 65-125

Setting

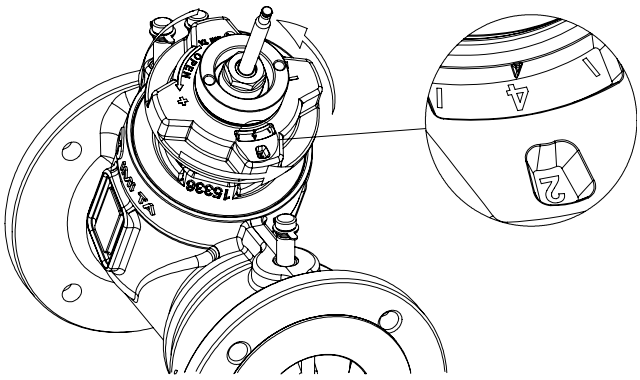

1. Disengage the actuator from the valve spindle.
2. Turn the setting wheel to desired value, e.g. 2.4.

Isolation

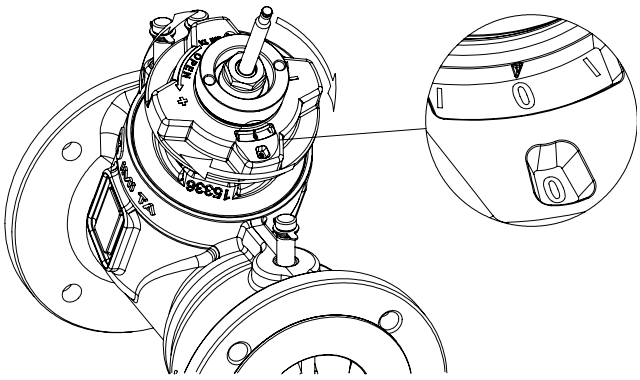

1. Disengage the actuator from the valve spindle.
2. Turn the setting wheel clockwise to stop (position 0 ±0.5).

Measuring q

1. Disengage the actuator from the valve spindle.
2. Connect the TA balancing instrument to the **red** and **blue** measuring points.
3. Input the valve type, size and setting and the actual flow is displayed.

Measuring ΔH

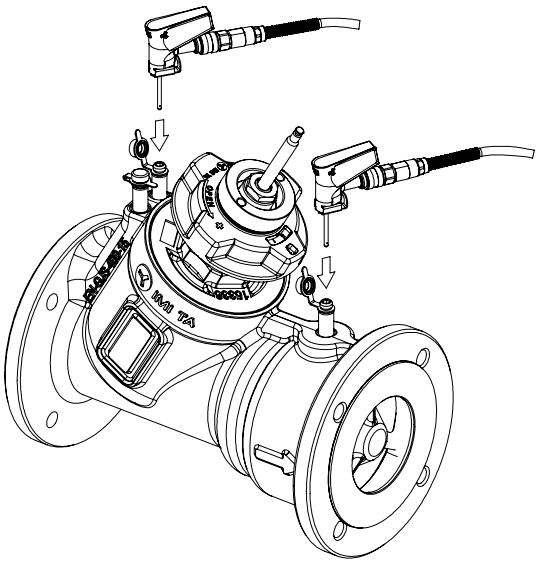

1. Disengage the actuator from the valve spindle.
2. Close the valve according to “Isolation”.
3. Connect the TA balancing instrument to the **red** and **black** measuring points and measure.

Important! After the measurement is completed;

4. Reopen the valve to previous setting

Measuring temperature

For temperature measurement the **black** measuring point is recommended.

Articles

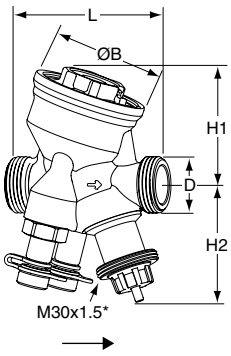

DN 15-32 – Temperature -20 – +120°C, ΔpV max. 600 kPa
Male threads according to ISO 228.

DN	D	L	H1	H2	B	q_{max} [l/h]	Kg	EAN	Article No
15	G3/4	74	55	55	54	480	0,60	7318794033405	52 164-415
20	G1	85	64	55	64	975	0,75	7318794033504	52 164-420
25	G1 1/4	93	64	67	64	1750	0,90	7318794033603	52 164-425
32	G1 1/2	117	78	70	78	3600	1,5	7318794027305	52 164-332

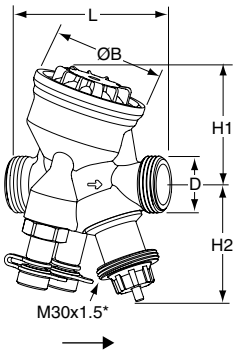

DN 15-25 – Temperature -10 – +90°C, ΔpV max. 400 kPa
Male threads according to ISO 228.

DN	D	L	H1	H2	B	q_{max} [l/h]	Kg	EAN	Article No
15	G3/4	74	55	55	54	480	0,54	7318794027008	52 164-315
20	G1	85	64	55	64	975	0,69	7318794027107	52 164-320
25	G1 1/4	93	64	67	64	1750	0,79	7318794027206	52 164-325

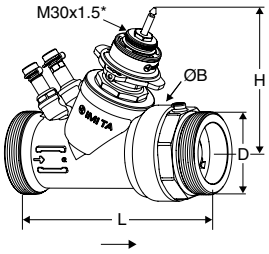

DN 40-50 – Temperature -10 – +90°C, ΔpV max. 400 kPa
Male threads according to ISO 228.

DN	D	L	H	B	q_{max} [l/h]	Kg	EAN	Article No
40	G2	187	132	88	6500	3,5	7318794030602	52 164-340
50	G2 1/2	196	135	88	11200	3,9	7318794030701	52 164-350

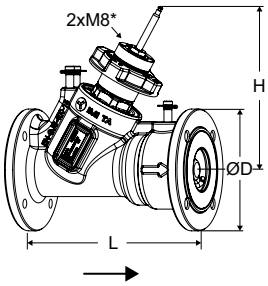

DN 65-125 – Temperature -20 – +120°C, ΔpV max. 800 kPa
Flanges according to EN-1092-2, type 21.

DN	Number of bolt holes	D	L	H	q_{max} [m³/h]	Kg	EAN	Article No
PN 16								
65	4	185	290	249	24,1	18	3831112533271	322021-11001
80	8	200	310	260	37,3	22	3831112533318	322021-11101
100	8	220	350	280	51,7	33	3831112535527	322021-11200
100 HF	8	220	350	280	75,9	33	3831112535565	322021-11203
125	8	250	400	287	77,3	45	3831112535602	322021-11300
125 HF	8	250	400	287	127	45	3831112535640	322021-11303
PN 25								
65	8	185	290	249	24,1	18	3831112533288	322021-11002
80	8	200	310	260	37,3	22	3831112533325	322021-11102
100	8	235	350	280	51,7	34	3831112535534	322021-11201
100 HF	8	235	350	280	75,9	34	3831112535572	322021-11204
125	8	270	400	287	77,3	47	3831112535619	322021-11301
125 HF	8	270	400	287	127	47	3831112535657	322021-11304

HF = High flow

*) Connection to actuator.
→ = Flow direction

Connections

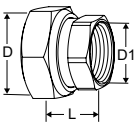

With female thread
Threads according to ISO 228.
Thread length according to ISO 7-1.
Swivelling nut
Brass/AMETAL®

Valve DN	D	D1	L*	EAN	Article No
15	G3/4	G1/2	21	7318794016903	52 163-015
20	G1	G3/4	23	7318794017009	52 163-020
25	G1 1/4	G1	23	7318794017108	52 163-025
32	G1 1/2	G1 1/4	31	7318794017207	52 163-032
40	G2	G1 1/2	30	7318794032705	52 163-040
50	G2 1/2	G2	32	7318794032804	52 163-050

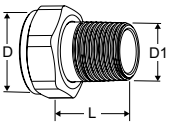

With male thread
Threads according to ISO 7-1.
Swivelling nut
Brass

Valve DN	D	D1	L*	EAN	Article No
15	G3/4	R1/2	29	4024052516612	0601-02.350
20	G1	R3/4	32,5	4024052516810	0601-03.350
25	G1 1/4	R1	35	4024052517015	0601-04.350
32	G1 1/2	R1 1/4	38,5	4024052517213	0601-05.350

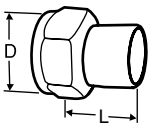

Welding connection
Swivelling nut
Brass/Steel 1.0045 (EN 10025-2)

Valve DN	D	Pipe DN	L*	EAN	Article No
15	G3/4	15	36	7318792748509	52 009-015
20	G1	20	40	7318792748608	52 009-020
25	G1 1/4	25	40	7318792748707	52 009-025
32	G1 1/2	32	40	7318792748806	52 009-032
40	G2	40	45	7318792748905	52 009-040
50	G2 1/2	50	50	7318792749001	52 009-050

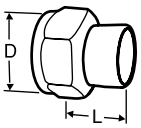

Soldering connection
Swivelling nut
Brass/gunmetal CC491K (EN 1982)

Valve DN	D	Pipe Ø	L*	EAN	Article No
15	G3/4	15	13	7318792749308	52 009-515
15	G3/4	16	13	7318792749407	52 009-516
20	G1	18	15	7318792749506	52 009-518
20	G1	22	18	7318792749605	52 009-522
25	G1 1/4	28	21	7318792749704	52 009-528
32	G1 1/2	35	26	7318792749803	52 009-535
40	G2	42	30	7318792749902	52 009-542
50	G2 1/2	54	35	7318792750007	52 009-554

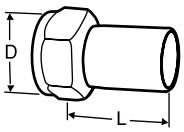

Connection with smooth end
For connection with press coupling
Swivelling nut
Brass/AMETAL®

Valve DN	D	Pipe Ø	L*	EAN	Article No
15	G3/4	15	39	7318793810601	52 009-315
20	G1	18	44	7318793810700	52 009-318
20	G1	22	48	7318793810809	52 009-322
25	G1 1/4	28	53	7318793810908	52 009-328
32	G1 1/2	35	59	7318793811004	52 009-335
40	G2	42	70	7318793811103	52 009-342
50	G2 1/2	54	80	7318793811202	52 009-354

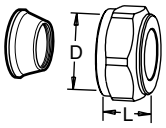

Compression connection
Support bushes shall be used, for more information see catalogue leaflet FPL.
Should not be used with PEX pipes.
Brass/AMETAL®
Chrome plated

Valve DN	D	Pipe Ø	L**	EAN	Article No
15	G3/4	15	27	7318793705006	53 319-615
15	G3/4	18	27	7318793705105	53 319-618
15	G3/4	22	27	7318793705204	53 319-622

*) Fitting length (from the gasket surface to the end of the connection).
**) Over all length L refers to unassembled coupling.

Adapters for actuators

Adapters
Adapters to other combinations of valve and recommended actuator are NOT needed.

Actuator	Valve DN	EAN	Article No
TA-MC50-C	25-32	3831112533851	322042-10700
TA-Slider 750	40-50	3831112533844	322042-80902

Accessories

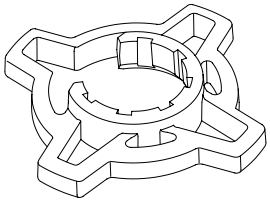

Grip for setting wheel, optional

For better grip when presetting.
For TA-COMPACT-P/-DP and TA-Modulator (DN 15-32).

Colour	EAN	Article No
Orange	7318794040502	52 164-950

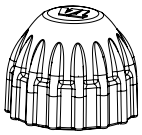

Protection cap

For TA-COMPACT-P/-DP, TA-Modulator (DN 15-20), TBV-C/-CM.

	EAN	Article No
Red	7318793961105	52 143-100

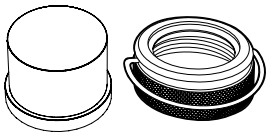

Tamper proof cover

Set containing plastic cover and locking ring for valves with connection M30x1.5 to thermostatic head/ actuator.
Prevents manipulation of setting.
Suitable for DN 15-32.

	EAN	Article No
	7318794030206	52 164-100

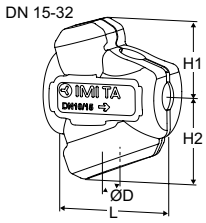

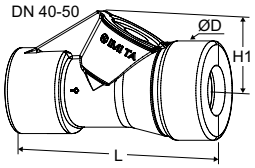

Insulation

For heating/comfort cooling.
Material: EPP.
Fire class:
DN 15-32: E (EN 13501-1), B2 (DIN 4102).
DN 40-50: F (EN 13501-1), B3 (DIN 4102).

Valve DN	L	H1	H2	D	EAN	Article No
15	100	61	71	84	7318794027404	52 164-901
20	118	67	79	90	7318794027503	52 164-902
25	127	71	84	104	7318794027602	52 164-903
32	154	85	99	124	7318794027701	52 164-904
40	277	105	-	131	7318794030800	52 164-905
50	277	105	-	131	7318794030909	52 164-906

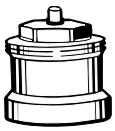

Spindle extension for DN 15-20

Recommended together with the insulation to minimize the risk of condensation at the valve-actuator interface.
M30x1,5.

L	EAN	Article No
Plastic, black		
30	4024052165018	2002-30.700

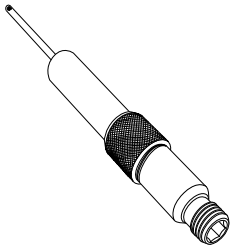

Measuring point, extension 60 mm
Can be installed without draining of the system.
AMETAL®/Stainless steel/EPDM
For all dimensions.

L	EAN	Article No
60	7318792812804	52 179-006

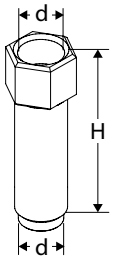

Venting extension
Suitable when insulation is used.
Stainless steel/EPDM/Brass.
AMETAL®

Valve DN	d	H	EAN	Article No
40-50	M10x1	32	7318794033702	52 164-301

Venting plug
Spare part.
AMETAL®

Valve DN	EAN	Article No
40-50	7318794033801	52 164-302