IMI TA

TA-PILOT-R

Differential pressure controllers

Pilot operated differential pressure controller with adjustable set-point

Engineering GREAT Solutions

IMI Hydronic Engineering

TA-PILOT-R

The TA-PILOT-R is a high performing differential pressure controller designed to keep a stable differential pressure over the load. With unrivaled accuracy TA-PILOT-R assists in delivering accurate and stable conditions to provide superior control valve authority for modulating control valves, additionally it can limit noise and simplify the balancing procedure. TA-PILOT-R is a differential pressure controller for use in return pipes. Measuring points enable pressure measurements for diagnostics.

Key features

> **Easy handling and installation**
Very low weight and small overall proportions.

> **Precise and stable differential pressure control**
Unrivaled accuracy thanks to the new PILOT technology.

> **Measuring and system diagnostics**
Unique features to validate and better understand system behaviour to minimize energy consumption.

Technical description

Application:
Heating and cooling systems.
Installation in the return pipe.

Functions:
Differential pressure control
Pre-setting Δp over the load (ΔpL)
Measuring (ΔpL)

Dimensions:
DN 65-200

Pressure class:
PN 16 and PN 25

Max. differential pressure (ΔpV):
800 kPa

Setting range:
10* - 50 kPa
30* - 150 kPa
80* - 400 kPa
*) Delivery settings

Leakage rate:
Tight sealing

Temperature:
Max. working temperature:
- with measuring points, standard: 120°C
- with measuring points, double secured: 150°C

Min. working temperature: -20°C

Media:
Water and neutral fluids, water-glycol mixtures.
(For other media contact IMI Hydronic Engineering.)

Material:
Valve body: Ductile iron EN-GJS-400
Pilot body: AMETAL®
O-rings: EDPM rubber
Seat seals: EPDM/Stainless steel
Plug mechanism: Stainless steel and brass
Membrane: EPDM rubber
Springs: Stainless steel
Screws and nuts: Stainless steel

AMETAL® is the dezincification resistant alloy of IMI Hydronic Engineering.

Surface treatment:
Pilot body: Non treated
Valve body: Electrophoretic painting.

Marking:
TA, IMI, DN, PN, Kvs, $T_{min/max}$, serial number, valve body material and flow direction arrow, label, ΔpL range.
Colour identification on top of the pilot:
10-50 kPa: Blue
30-150 kPa: Orange
80-400 kPa: Grey
CE-marking:
DN 65-125: CE
DN 150-200: CE 1370 *
*) Notified body.

Flanges:
PN 16, PN 25: According to EN-1092-2, type 21.
Face to face length according to EN 558 series 3.

Working range

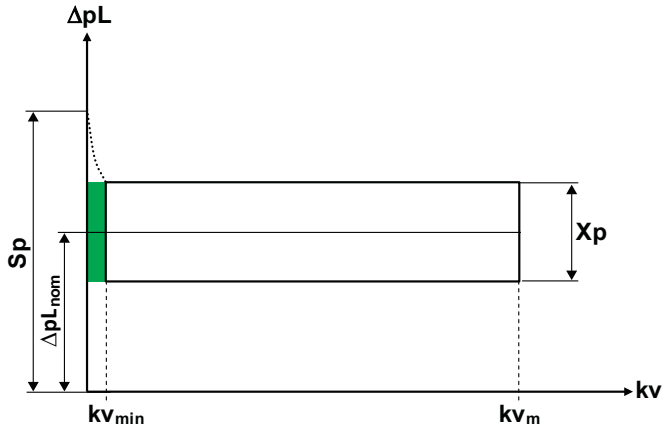

Sp = Sealing pressure, the increase of ΔpL in kPa when a Δp controller controls ΔpL from Kv_{min} down to zero flow.
Kv_{min} = m^3/h at a pressure drop of 1 bar and minimum opening corresponding to the p-band.
Kv_m = m^3/h at a pressure drop of 1 bar and maximum opening corresponding to the p-band.
q_{max} = The maximum recommended flow through a Δp controller.
$ΔpL_{nom}$ = Middle value of ΔpL in the p-band.
Xp = The p-band in kPa for ΔpL.
ΔH = Available differential pressure.
Δp = Pressure drop accross the valve.
q = Actual measured flow.

DN		65	80	100	125	150	200
Sp [kPa]	ΔH = 0-400 kPa	45					
	ΔH = 400-800 kPa	65					
Kv_{min}		4					
Kv_m		75	110	180	270	400	600
q_{max} [m^3/h]		53	78	127	191	283	424

NOTE: Below Kv_{min} use expansion vessel for stable control. If Sp is within the p-band, the p-band is valid down to Kv = 0.

Maximum p-band in ±% of $ΔpL_{nom}$

Setting range
10-50 / 30-150 kPa

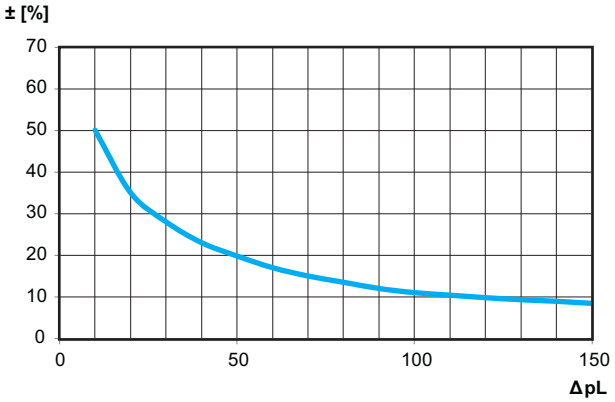

80-400 kPa

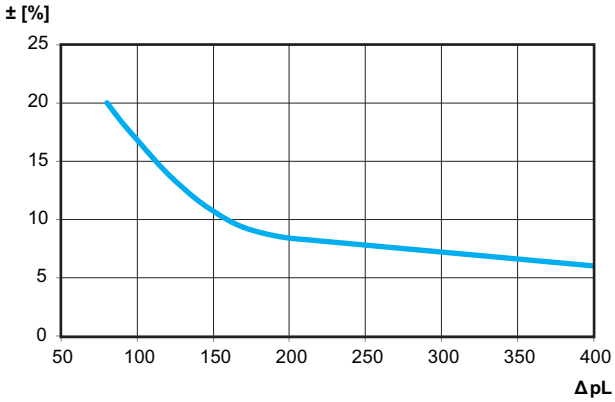

Noise

In order to avoid noise in the installation the valve must be correctly installed and the water de-aerated.

Sizing

The diagram shows the lowest pressure drop required for the TA-PILOT-R valve to be within its working range at different flows.

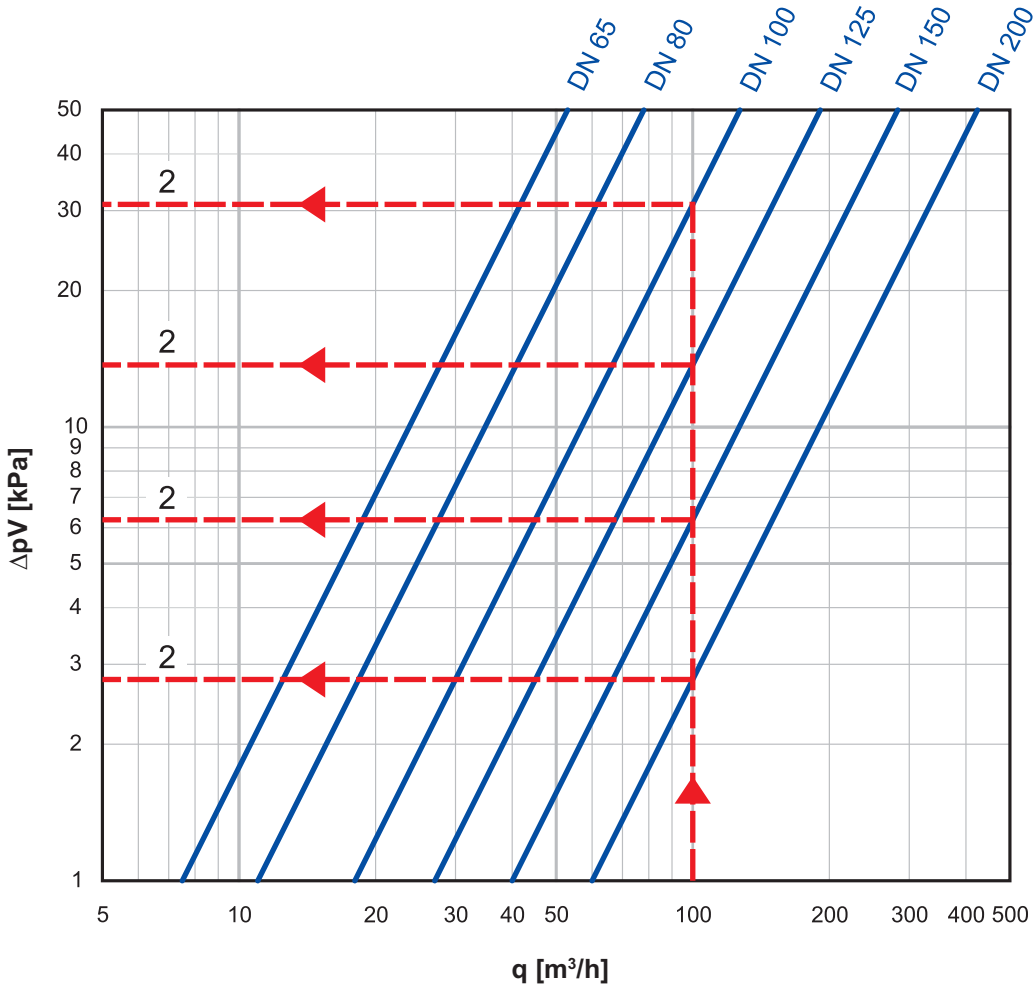

Example
Design flow 100 m^3/h, ΔpL = 60 kPa and available differential pressure ΔH = 80 kPa.

1. Design flow (q) 100 m^3/h.

2. Read the minimum needed pressure drop for TA-PILOT-R ΔpV_{min} from the diagram.

DN 100 ΔpV_{min} = 31 kPa
DN 125 ΔpV_{min} = 14 kPa
DN 150 ΔpV_{min} = 6 kPa
DN 200 ΔpV_{min} = 2,8 kPa

3. Check that the ΔpL is within the setting range for these sizes.

4. Calculate the minimum needed available differential pressure ΔH_{min}.
Pressure drop over fully open STAF and 100 m^3/h,
DN 100 = 28 kPa, DN 125 = 11 kPa, DN 150 = 6 kPa and
DN 200 = 2 kPa.

$$\Delta H_{min} = \Delta pV_{STAF} + \Delta pL + \Delta pV_{min}$$

DN 100: ΔH_{min} = 28 + 60 + 31 = 119 kPa
DN 125: ΔH_{min} = 11 + 60 + 14 = 85 kPa
DN 150: ΔH_{min} = 6 + 60 + 6 = 72 kPa
DN 200: ΔH_{min} = 2 + 60 + 2,8 = 64,8 kPa

5. In order to optimise the control function of the TA-PILOT-R select the smallest possible valve, in this case DN 150.
(DN 100 and DN 125 are not suitable since ΔH_{min} = 119 and 85 kPa and the available differential pressure only 80 kPa.)

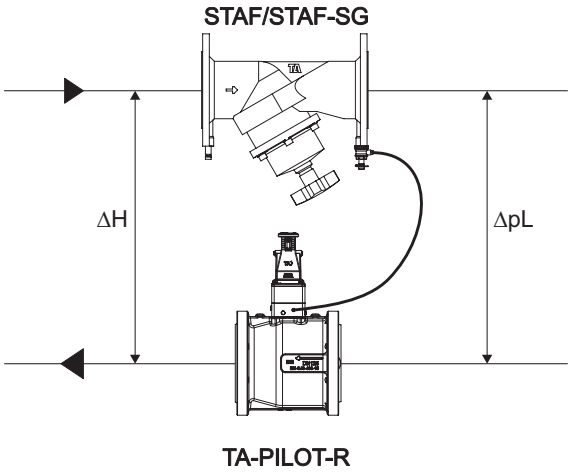

IMI Hydronic Engineering recommends the software HySelect for calculating the valve size. HySelect can be downloaded from www.imi-hydronic.com.

When to use expansion vessel

Example
Given:
Minimum flow qmin = 6 m^3/h
Design pressure drop of the load ΔpL = 200 kPa
Available differential pressure at minimum flow ΔH_{max} = 300 kPa

1. Calculate Kv_{min} for q_{min} at ΔH_{max}.

$$Kv_{min} = 10 \cdot q_{min}/\sqrt{(\Delta H_{max} - \Delta pL)}$$

$$Kv_{min} = 10 \cdot 6/\sqrt{(300-200)} = 6$$

Kv_{min} is **above 4**.
Expansion vessel is **not** needed.

$$Kv = 10 \cdot \frac{q}{\sqrt{\Delta p}} \qquad (q\ [m^3/h];\ \Delta p\ [kPa])$$

Installation

Application examples

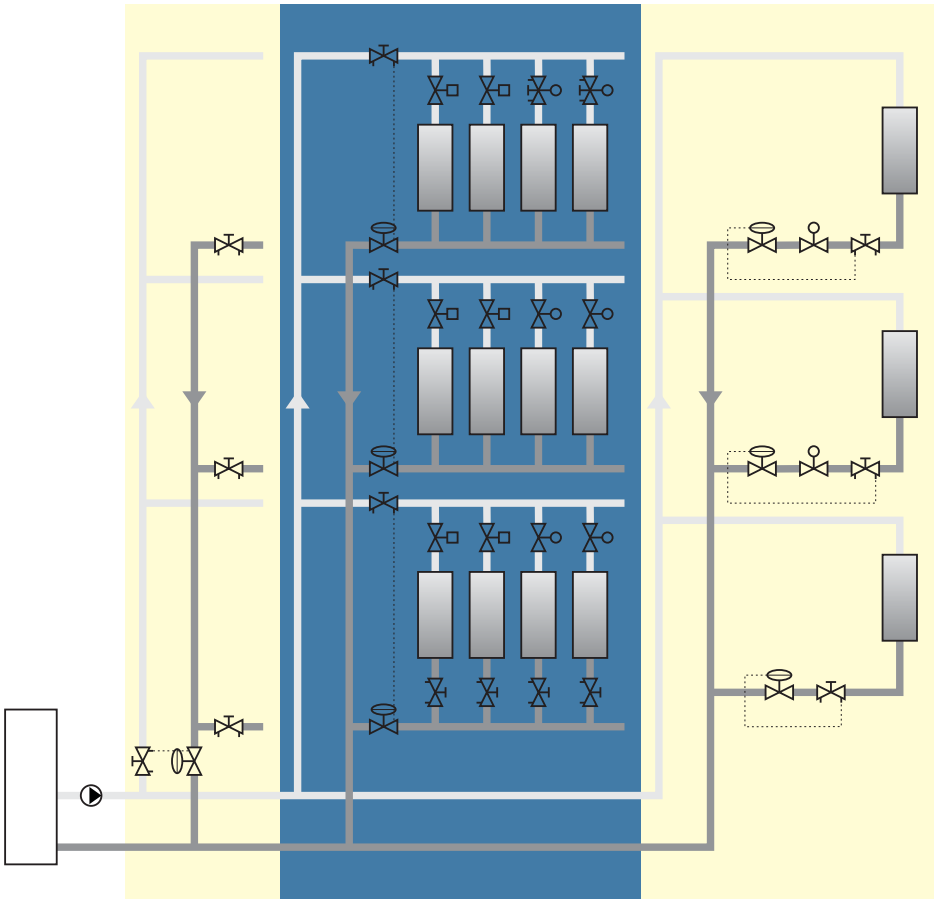

Installation of valve

Approx. 140 mm free space is required above the pilot.

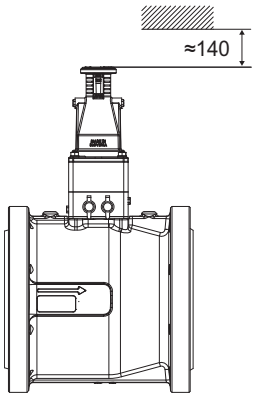

Flow direction

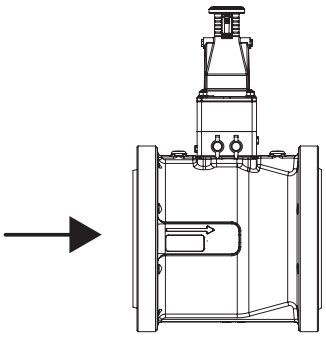

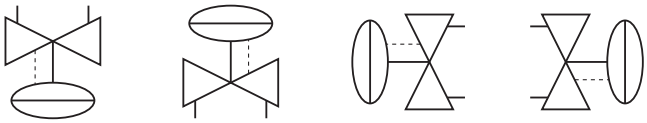

Operating function

Setting

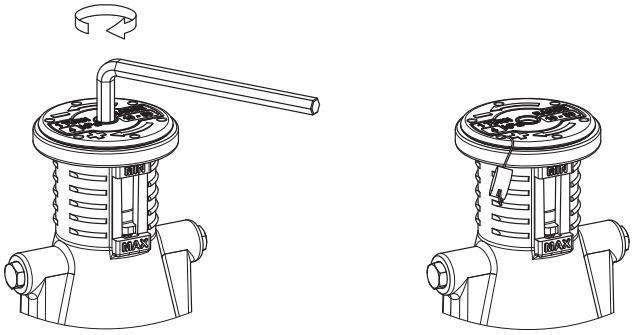

1. Use a 5 mm allen key for setting. Turn clockwise to increase the setting, see tables “Setting table” and “kPa/turn”. Each rib on the pilot correspond to the different settings in the “Setting table”.
2. Tamper proof the setting if necessary.

Setting table

		[kPa]		
		10-50	30-150	80-400
MIN	0	10*	30*	80*
–	2,5	20	60	160
–	5	30	90	240
–	7,5	40	120	320
MAX	10	50	150	400

*) Delivery setting.

kPa/turn

10-50	30-150	80-400
4 kPa	12 kPa	32 kPa

kPa/turn is also marked on the top of the pilot.

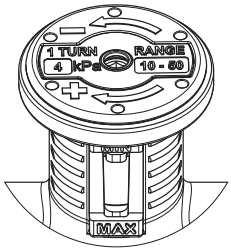

Venting

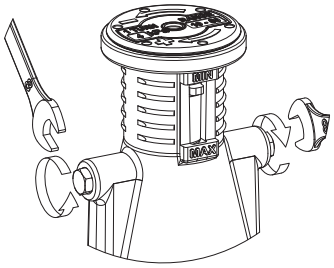

To vent the valve, open the topmost venting screw.
NOTE! Max. 2 turns opening.

Measuring ΔpL

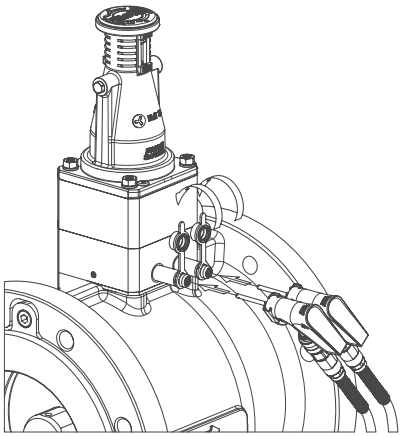

Connect IMI TA balancing instrument to the measuring points and measure ΔpL.

Articles – Max. 120°C

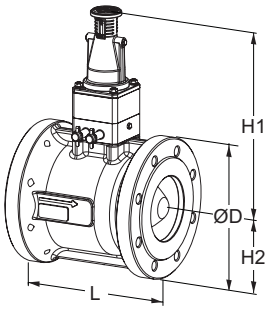

Flanged

Flanges according to EN-1092-2, type 21.
1,2 m capillary pipe (Ø6 mm), capillary pipe connection Ø6xR1/4 and capillary pipe connection with shut-off Ø6xG3/8 are included.

PN 16

DN	D	L	H1	H2	Kv_m	q_{max} [m³/h]	Kg	EAN	Article No
10-50 kPa									
65	185	190	274	93	75	53	18	3831112530140	23121-2111-065
80	200	203	281	100	110	78	21	3831112530232	23121-2111-080
100	220	229	303	110	180	127	32	3831112530508	23121-2111-100
125	250	254	313	125	270	191	42	3831112530591	23121-2111-125
150	285	267	331	143	400	283	56	3831112530690	23121-2111-150
200	340	292	361	170	600	424	83	3831112530782	23121-2111-200
30-150 kPa									
65	185	190	274	93	75	53	18	3831112530157	23121-2121-065
80	200	203	281	100	110	78	21	3831112530249	23121-2121-080
100	220	229	303	110	180	127	32	3831112530515	23121-2121-100
125	250	254	313	125	270	191	42	3831112530607	23121-2121-125
150	285	267	331	143	400	283	56	3831112530706	23121-2121-150
200	340	292	361	170	600	424	83	3831112530935	23121-2121-200
80-400 kPa									
65	185	190	274	93	75	53	18	3831112530164	23121-2131-065
80	200	203	281	100	110	78	21	3831112530256	23121-2131-080
100	220	229	303	110	180	127	32	3831112530522	23121-2131-100
125	250	254	313	125	270	191	42	3831112530614	23121-2131-125
150	285	267	331	143	400	283	56	3831112530713	23121-2131-150
200	340	292	361	170	600	424	83	3831112530942	23121-2131-200

PN 25

DN	D	L	H1	H2	Kv_m	q_{max} [m³/h]	Kg	EAN	Article No
10-50 kPa									
65	185	190	274	93	75	53	18	3831112530171	23121-2211-065
80	200	203	281	100	110	78	21	3831112530263	23121-2211-080
100	235	229	303	118	180	127	34	3831112530539	23121-2211-100
125	270	254	313	135	270	191	45	3831112530621	23121-2211-125
150	300	267	331	150	400	283	59	3831112530720	23121-2211-150
200	360	292	361	180	600	424	87	3831112530959	23121-2211-200
30-150 kPa									
65	185	190	274	93	75	53	18	3831112530195	23121-2221-065
80	200	203	281	100	110	78	21	3831112530270	23121-2221-080
100	235	229	303	118	180	127	34	3831112530546	23121-2221-100
125	270	254	313	135	270	191	45	3831112530638	23121-2221-125
150	300	267	331	150	400	283	59	3831112530737	23121-2221-150
200	360	292	361	180	600	424	87	3831112530966	23121-2221-200
80-400 kPa									
65	185	190	274	93	75	53	18	3831112530188	23121-2231-065
80	200	203	281	100	110	78	21	3831112530287	23121-2231-080
100	235	229	303	118	180	127	34	3831112530553	23121-2231-100
125	270	254	313	135	270	191	45	3831112530645	23121-2231-125
150	300	267	331	150	400	283	59	3831112530744	23121-2231-150
200	360	292	361	180	600	424	87	3831112530973	23121-2231-200

Kv_m = m³/h at a pressure drop of 1 bar and maximum opening corresponding to the p-band.

Articles – Max. 150°C (double secured measuring points)

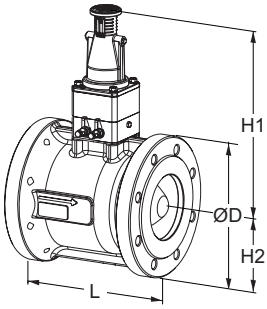

Flanged

Flanges according to EN-1092-2, type 21.
1,2 m capillary pipe (Ø6 mm), capillary pipe connection Ø6xR1/4 and capillary pipe connection with shut-off Ø6xG3/8 are included.

PN 16

DN	D	L	H1	H2	Kv_m	q_{max} [m³/h]	Kg	EAN	Article No
10-50 kPa									
65	185	190	274	93	75	53	18	3831112531017	23121-2112-065
80	200	203	281	100	110	78	21	3831112531109	23121-2112-080
100	220	229	303	110	180	127	32	3831112531192	23121-2112-100
125	250	254	313	125	270	191	42	3831112531284	23121-2112-125
150	285	267	331	143	400	283	56	3831112531376	23121-2112-150
200	340	292	361	170	600	424	83	3831112531468	23121-2112-200
30-150 kPa									
65	185	190	274	93	75	53	18	3831112531024	23121-2122-065
80	200	203	281	100	110	78	21	3831112531116	23121-2122-080
100	220	229	303	110	180	127	32	3831112531208	23121-2122-100
125	250	254	313	125	270	191	42	3831112531291	23121-2122-125
150	285	267	331	143	400	283	56	3831112531383	23121-2122-150
200	340	292	361	170	600	424	83	3831112531475	23121-2122-200
80-400 kPa									
65	185	190	274	93	75	53	18	3831112531031	23121-2132-065
80	200	203	281	100	110	78	21	3831112531123	23121-2132-080
100	220	229	303	110	180	127	32	3831112531277	23121-2132-100
125	250	254	313	125	270	191	42	3831112531307	23121-2132-125
150	285	267	331	143	400	283	56	3831112531390	23121-2132-150
200	340	292	361	170	600	424	83	3831112531482	23121-2132-200

PN 25

DN	D	L	H1	H2	Kv_m	q_{max} [m³/h]	Kg	EAN	Article No
10-50 kPa									
65	185	190	274	93	75	53	18	3831112531055	23121-2212-065
80	200	203	281	100	110	78	21	3831112531130	23121-2212-080
100	235	229	303	118	180	127	34	3831112531215	23121-2212-100
125	270	254	313	135	270	191	45	3831112531314	23121-2212-125
150	300	267	331	150	400	283	59	3831112531406	23121-2212-150
200	360	292	361	180	600	424	87	3831112531499	23121-2212-200
30-150 kPa									
65	185	190	274	93	75	53	18	3831112531048	23121-2222-065
80	200	203	281	100	110	78	21	3831112531147	23121-2222-080
100	235	229	303	118	180	127	34	3831112531222	23121-2222-100
125	270	254	313	135	270	191	45	3831112531321	23121-2222-125
150	300	267	331	150	400	283	59	3831112531413	23121-2222-150
200	360	292	361	180	600	424	87	3831112531505	23121-2222-200
80-400 kPa									
65	185	190	274	93	75	53	18	3831112531062	23121-2232-065
80	200	203	281	100	110	78	21	3831112531161	23121-2232-080
100	235	229	303	118	180	127	34	3831112531239	23121-2232-100
125	270	254	313	135	270	191	45	3831112531338	23121-2232-125
150	300	267	331	150	400	283	59	3831112531420	23121-2232-150
200	360	292	361	180	600	424	87	3831112531512	23121-2232-200

Kv_m = m³/h at a pressure drop of 1 bar and maximum opening corresponding to the p-band.

Additional equipment

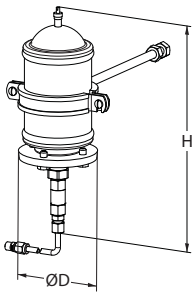

Expansion vessel
For working area less than Kv = 4.
1,2 m capillary pipe (Ø6 mm) and capillary pipe connection Ø6xR1/4 are included.
Factory set at 3 bar.

H	D	EAN	Article No
266	90	3831112532052	23124-2542-001

Accessories

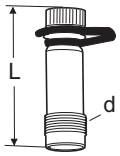

Measuring point
Max 120°C (intermittent 150°C)

d	L	EAN	Article No
M14x1	44	7318792813207	52 179-014
M14x1	103	7318793858108	52 179-015

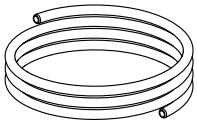

Capillary pipe
Ø6 mm
1 pc included in TA-PILOT-R.

L [m]	EAN	Article No
1,2	3831112527157	52 759-215

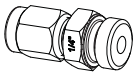

Capillary pipe connection
For capillary pipe Ø6 mm with R1/4" connection.
1 pc included in TA-PILOT-R.

	EAN	Article No
6xR1/4"	3831112527355	52 759-201

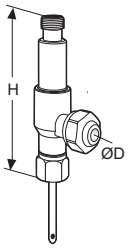

Measuring point, two-way
For connection of capillary pipe while permitting simultaneous use of our balancing instrument.
For connection to existing measuring point on STAF/STAF-SG.
Can be installed during operation.

D	H	EAN	Article No
6	68	7318793848703	52 179-206

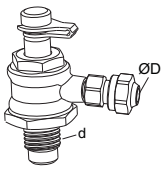

Capillary pipe connection with shut-off
For replacement of existing measuring point on STAF/STAF-SG.
52 265-208: 1 pc included in TA-PILOT-R.

d	D	For DN	EAN	Article No
G1/4	6	20-50	7318793999504	52 265-209
G3/8	6	65-400	7318793999405	52 265-208

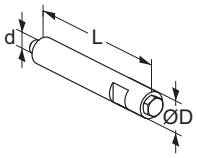

Venting extension
Suitable when insulation is used.

d	D	L	EAN	Article No
M6	12	70	3831112531727	52 759-220

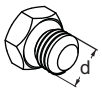

Venting screw

d	EAN	Article No
M6	3831112527980	52 759-211